FRITO LAY TC-2
AUSTIN TEXAS
MAIN CONTROL PANEL - CP1
ELECTRICAL DRAWINGS

SHEET	DESCRIPTION	DESCRIPTION	FILENAME
1	TABLE OF CONTENTS		103065–E01
2	GENERAL NOTES		103065–E02
3	ELECTRICAL SYSTEM LAYOUT		103065–E03
4	SPARE SHEET		103065–E04
5	COMPACTLOGIX LAYOUT		103065–E05
6	SPARE SHEET		103065–E06
7	POWER DISTRIBUTION	115VAC/24VDC CONTROL POWER	103065–E07
8	POWER DISTRIBUTION	INCLINE CONVEYOR 1 & UPGRADE ACCUMULATOR	103065–E08
9	POWER DISTRIBUTION	DISTRIBUTION CONVEYOR 1, 2 & 3	103065–E09
10	POWER DISTRIBUTION	DISTRIBUTION CONVEYOR 4, 5 & 6	103065–E10
11	POWER DISTRIBUTION	WEIGHER FEEDER 1, 2 & 3	103065–E11
12	POWER DISTRIBUTION	WEIGHER FEEDER 4, 5 & 6	103065–E12
13	CONTROL SCHEMATIC	SAFETY RELAY & CONTROL POWER	103065–E13
14	CONTROL SCHEMATIC	24VDC DIGITAL INPUTS, RACK 0, SLOT 1	103065–E14
15	CONTROL SCHEMATIC	24VDC DIGITAL INPUTS, RACK 0, SLOT 2	103065–E15
16	CONTROL SCHEMATIC	24VDC DIGITAL INPUTS, RACK 0, SLOT 3	103065–E16
17	CONTROL SCHEMATIC	24VDC DIGITAL INPUTS, RACK 0, SLOT 4	103065–E17
18	CONTROL SCHEMATIC	WEIGHER RELAY BOARD 1, 2 & 3	103065–E18
19	CONTROL SCHEMATIC	WEIGHER RELAY BOARD 4, 5 & 6	103065–E19
20	PANEL LAYOUT		103065–E20
21	SET–UP PARAMETERS		103065–E21
22	SET–UP PARAMETERS		103065–E22
23	SET–UP PARAMETERS		103065–E23

REV.	DESCRIPTION	BY	DATE
–	COMPLETELY REDRAWN	NS	2–5–26

REVISIONS

AUTOMATION SOLUTIONS OF AMERICA
1390 GATEWAY BLVD
BELOIT, WI

A DIVISION OF:
THE MORSE GROUP
WWW.THEMORSEGROUP.COM

PROJECT TITLE:
FRITO LAY TC–2
AUSTIN TEXAS
MAIN CONTROL PANEL – CP1

SHEET TITLE:
TABLE OF CONTENTS

DATE:	DESIGNED BY:	DRAWN BY:
2–5–26	JM	DH
JOB NUMBER: 103065	ACAD FILE NUMBER: 103065–E01	SHEET NO: 1 of 23

Plot Date: 02–05–2026
Drawing Name: 103065–E01

NOTES: UNLESS OTHERWISE SPECIFIED

1. NOMINAL SYSTEM VOLTAGES SHOULD BE WITHIN THE FOLLOWING TOLERANCES PER ANSI C84.1–1982[2] AND ANSI/NEMA MG1–1987[8]; NOMINAL VOLTAGE: +5.8% – 8.3%
2. ELECTRICAL INSTALLATION TO BE PERFORMED IN ACCORDANCE WITH THE CURRENT REVISION OF THE NATIONAL ELECTRICAL CODE (NEC), STATE AND LOCAL REQUIREMENTS.
3. ENCLOSURE GROUND WIRING IS TO BE GREEN AND ATTACHED TO THE COMMON GROUND LUG.
4. LOCKOUT/TAGOUT PROCEDURES MUST BE FOLLOWED AT ALL TIMES PRIOR TO OPENING OR SERVICING THE ENCLOSURE AND/OR EQUIPMENT.

5) FIELD INTERCONNECTING WIRING TO BE FURNISHED BY CUSTOMER.

6) THIS INDUSTRIAL CONTROL PANEL SHALL BE BUILT TO NFPA 79 & NFPA 86 (2015) STANDARDS.

7) THIS INDUSTRIAL CONTROL PANEL SHALL BE UL LABELED TO UL508A STANDARDS.

8) DO NOT RUN AC & DC WIRING IN THE SAME CONDUIT.

9) LOW LEVEL SHIELDED DC SIGNAL WIRING SHOULD BE GROUNDED AT ONE END.

10) CONDUIT IS TO BE RUN INTO THE BOTTOM OR SIDES OF ENCLOSURES, NOT INTO THE TOP.

11) REFERENCE THE VFD MANUFACTURER'S USER MANUAL FOR RECOMMEND INSTALLATION CRITERIA.

12) USE UL LISTED CLOSED–LOOP CRIMP TERMINALS WHEN WIRING TO YASKAWA V1000 MAIN CIRCUIT TERMINALS. SEE MANUFACTURE'S USER MANUAL FOR PROPER TERMINAL SIZING.

13) FIELD INSTALLATION RECOMMENDATIONS:

3–PHASE POWER WIRING: MINIMUM #12AWG, 600V INSULATION, 90°C, THHN OR EQUIVALENT.

1–PHASE CONTROL WIRING: MINIMUM #14AWG, 600V INSULATION, 90°C, THHN OR EQUIVALENT.

DC CONTROL WIRING: MINIMUM #14AWG, 600V INSULATION, 90°C, THHN OR EQUIVALENT.

2–CONDUCTOR DC SIGNAL WIRING: MINIMUM #18AWG, STRANDED W/SHIELD, 300V INSULATION, (I.E. BELDEN 8760 OR EQUIVALENT)

3–CONDUCTOR DC SIGNAL WIRING: MINIMUM #18AWG, STRANDED W/SHIELD, 300V INSULATION, (I.E.BELDEN 8770 OR EQUIVALENT)

LEGEND

FACTORY WIRING

FIELD WIRING BY CUSTOMER

FACTORY WIRING BY HEAT AND CONTROL

TERMINALS LOCATED IN MAIN CONTROL PANEL – CP1 (451960–01)

1 TERMINALS LOCATED IN ACCUMULATOR JUNCTION BOX (BY GALESBURG)

2 TERMINALS LOCATED IN DISTRIBUTION CONVEYOR 1 JUNCTION BOX (BY GALESBURG)

3 TERMINALS LOCATED IN DISTRIBUTION CONVEYOR 2 JUNCTION BOX (BY GALESBURG)

4 TERMINALS LOCATED IN DISTRIBUTION CONVEYOR 3 JUNCTION BOX (BY GALESBURG)

5 TERMINALS LOCATED IN WEIGHER FEEDER 1 JUNCTION BOX (BY GALESBURG)

6 TERMINALS LOCATED IN WEIGHER FEEDER 2 JUNCTION BOX (BY GALESBURG)

7 TERMINALS LOCATED IN WEIGHER FEEDER 3 JUNCTION BOX (BY GALESBURG)

1 TERMINALS LOCATED IN WEIGHER 1 JUNCTION BOX (BY OTHERS)

2 TERMINALS LOCATED IN WEIGHER 2 JUNCTION BOX (BY OTHERS)

3 TERMINALS LOCATED IN WEIGHER 3 JUNCTION BOX (BY OTHERS)

X DESIGNATES NOTE SPECIFIC TO ITEM ON A GIVEN SHEET (LOCAL NOTE FLAG)

X DESIGNATES NOTE TO REFERENCE ON GENERAL NOTES SHEET (GLOBAL NOTE FLAG). REFERENCE NOTATIONS:

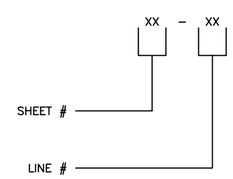

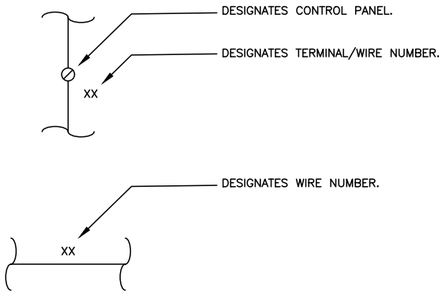

REV.	DESCRIPTION	BY	DATE
–	COMPLETELY REDRAWN	NS	2–5–26

REVISIONS

AUTOMATION SOLUTIONS OF AMERICA
1390 GATEWAY BLVD
BELOIT, WI

A DIVISION OF:
THE MORSE GROUP
WWW.THEMORSEGROUP.COM

PROJECT TITLE:
FRITO LAY TC–2
AUSTIN TEXAS
MAIN CONTROL PANEL – CP1

SHEET TITLE:
GENERAL NOTES

DATE:	DESIGNED BY:	DRAWN BY:
2–5–26	JM	DH
JOB NUMBER: 103065	ACAD FILE NUMBER: 103065–E02	SHEET NO: 2 of 23

Plot Date: 02–05–2026
Drawing Name: 103065–E02

NOTES: UNLESS OTHERWISE SPECIFIED

1. NOMINAL SYSTEM VOLTAGES SHOULD BE WITHIN THE FOLLOWING TOLERANCES PER ANSI C84.1–1982[2] AND ANSI/NEMA MG1–1987[8]; NOMINAL VOLTAGE: +5.8% – 8.3%
2. ELECTRICAL INSTALLATION TO BE PERFORMED IN ACCORDANCE WITH THE CURRENT REVISION OF THE NATIONAL ELECTRICAL CODE (NEC), STATE AND LOCAL REQUIREMENTS.
3. ENCLOSURE GROUND WIRING IS TO BE GREEN AND ATTACHED TO THE COMMON GROUND LUG.
4. LOCKOUT/TAGOUT PROCEDURES MUST BE FOLLOWED AT ALL TIMES PRIOR TO OPENING OR SERVICING THE ENCLOSURE AND/OR EQUIPMENT.

5) FIELD INTERCONNECTING WIRING TO BE FURNISHED BY CUSTOMER.

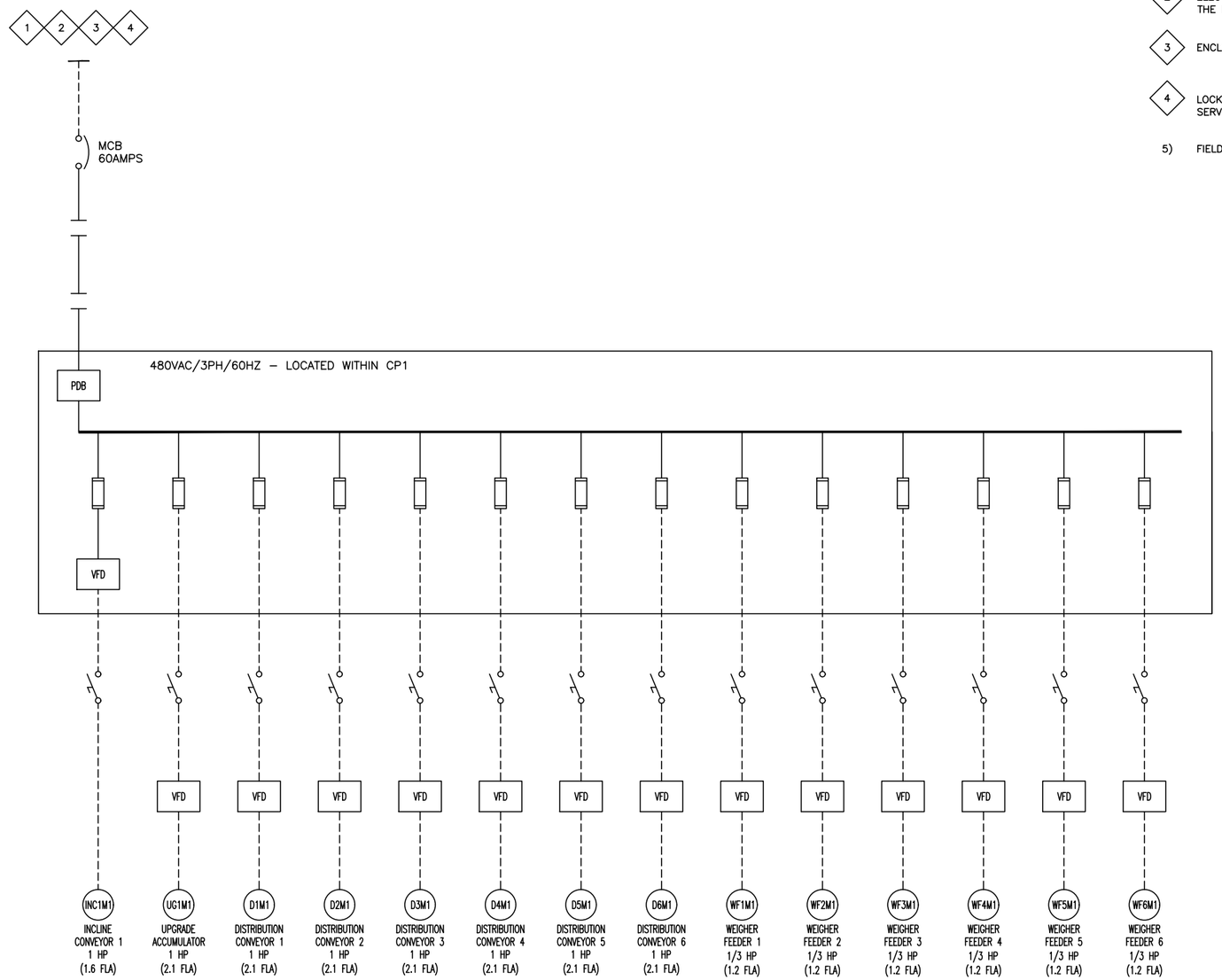

REV.	DESCRIPTION	BY	DATE
–	COMPLETELY REDRAWN	NS	2–5–26

REVISIONS

ASA
AUTOMATION SOLUTIONS OF AMERICA
1390 GATEWAY BLVD
BELOIT, WI
A DIVISION OF:
THE MORSE GROUP
WWW.THEMORSEGROUP.COM

PROJECT TITLE:
FRITO LAY TC–2
AUSTIN TEXAS
MAIN CONTROL PANEL – CP1

SHEET TITLE:
ELECTRICAL SYSTEM LAYOUT

DATE:	DESIGNED BY:	DRAWN BY:
2–5–26	JM	DH
JOB NUMBER: 103065	ACAD FILE NUMBER: 103065–E03	SHEET NO: 3 of 23

Plot Date: 02–05–2026
Drawing Name: 103065–E03

REV.	DESCRIPTION	BY	DATE
–	COMPLETELY REDRAWN	NS	2–5–26

REVISIONS

AUTOMATION SOLUTIONS OF AMERICA
1390 GATEWAY BLVD
BELOIT, WI

A DIVISION OF:

THE MORSE GROUP
WWW.THEMORSEGROUP.COM

PROJECT TITLE:
FRITO LAY TC–2
AUSTIN TEXAS
MAIN CONTROL PANEL – CP1

SHEET TITLE:
SPARE SHEET

DATE:	DESIGNED BY:	DRAWN BY:
2–5–26	JM	DH
JOB NUMBER: 103065	ACAD FILE NUMBER: 103065–E04	SHEET NO: 4 of 23

Plot Date: 02–05–2026

Drawing Name: 103065–E04

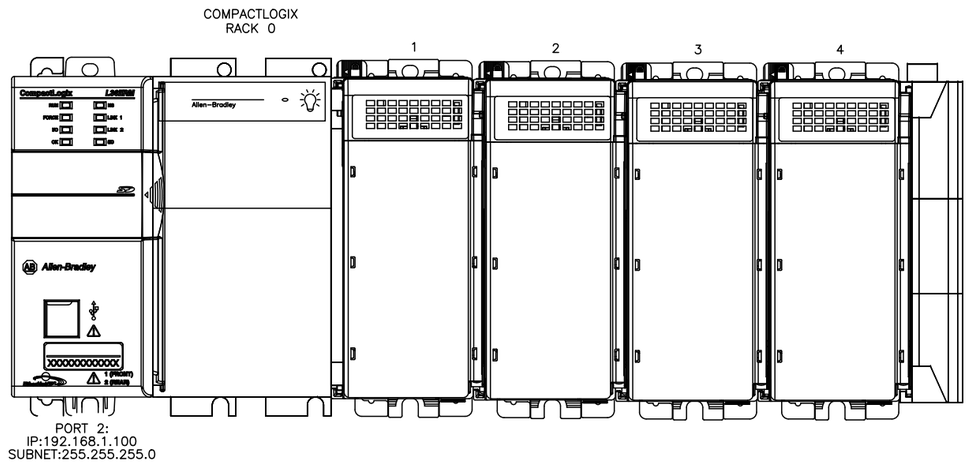

REV.	DESCRIPTION	BY	DATE
–	COMPLETELY REDRAWN	NS	2–5–26

REVISIONS

ASA

AUTOMATION SOLUTIONS OF AMERICA
1390 GATEWAY BLVD
BELOIT, WI

A DIVISION OF:

THE MORSE GROUP
WWW.THEMORSEGROUP.COM

PROJECT TITLE:
FRITO LAY TC–2
AUSTIN TEXAS
MAIN CONTROL PANEL – CP1

SHEET TITLE:
COMPACTLOGIX LAYOUT

DATE:	DESIGNED BY:	DRAWN BY:
2–5–26	JM	DH
JOB NUMBER:	ACAD FILE NUMBER:	SHEET NO:
103065	103065–E05	5 of 23

Plot Date: 02–05–2026
Drawing Name: 103065–E05

REV.	DESCRIPTION	BY	DATE
–	COMPLETELY REDRAWN	NS	2–5–26

REVISIONS

AUTOMATION SOLUTIONS OF AMERICA
1390 GATEWAY BLVD
BELOIT, WI

A DIVISION OF:

THE MORSE GROUP
WWW.THEMORSEGROUP.COM

PROJECT TITLE:
FRITO LAY TC–2
AUSTIN TEXAS
MAIN CONTROL PANEL – CP1

SHEET TITLE:
SPARE SHEET

DATE:	DESIGNED BY:	DRAWN BY:
2–5–26	JM	DH
JOB NUMBER: 103065	ACAD FILE NUMBER: 103065–E06	SHEET NO: 6 of 23

Plot Date: 02–05–2026

Drawing Name: 103065–E06

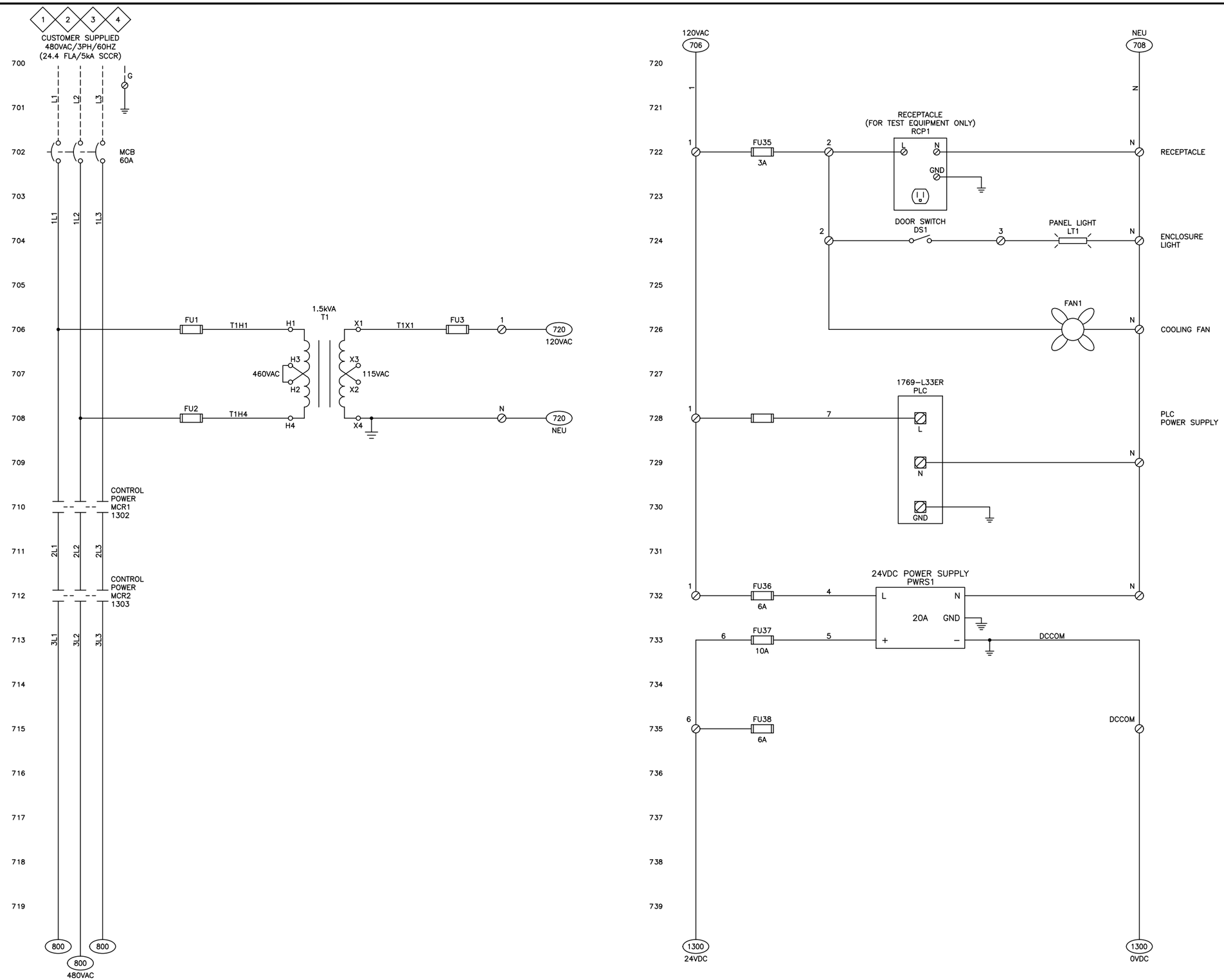

REV.	DESCRIPTION	BY	DATE
–	COMPLETELY REDRAWN	NS	2–5–26

REVISIONS

AUTOMATION SOLUTIONS OF AMERICA
1390 GATEWAY BLVD
BELOIT, WI

A DIVISION OF:

THE MORSE GROUP
WWW.THEMORSEGROUP.COM

PROJECT TITLE:
FRITO LAY TC–2
AUSTIN TEXAS
MAIN CONTROL PANEL – CP1

SHEET TITLE:
POWER DISTRIBUTION
115VAC/24VDC CONTROL POWER

DATE:	DESIGNED BY:	DRAWN BY:
2–5–26	JM	DH
JOB NUMBER:	ACAD FILE NUMBER:	SHEET NO:
103065	103065–E07	7 of 23

Plot Date: 02–05–2026

Drawing Name: 103065–E07

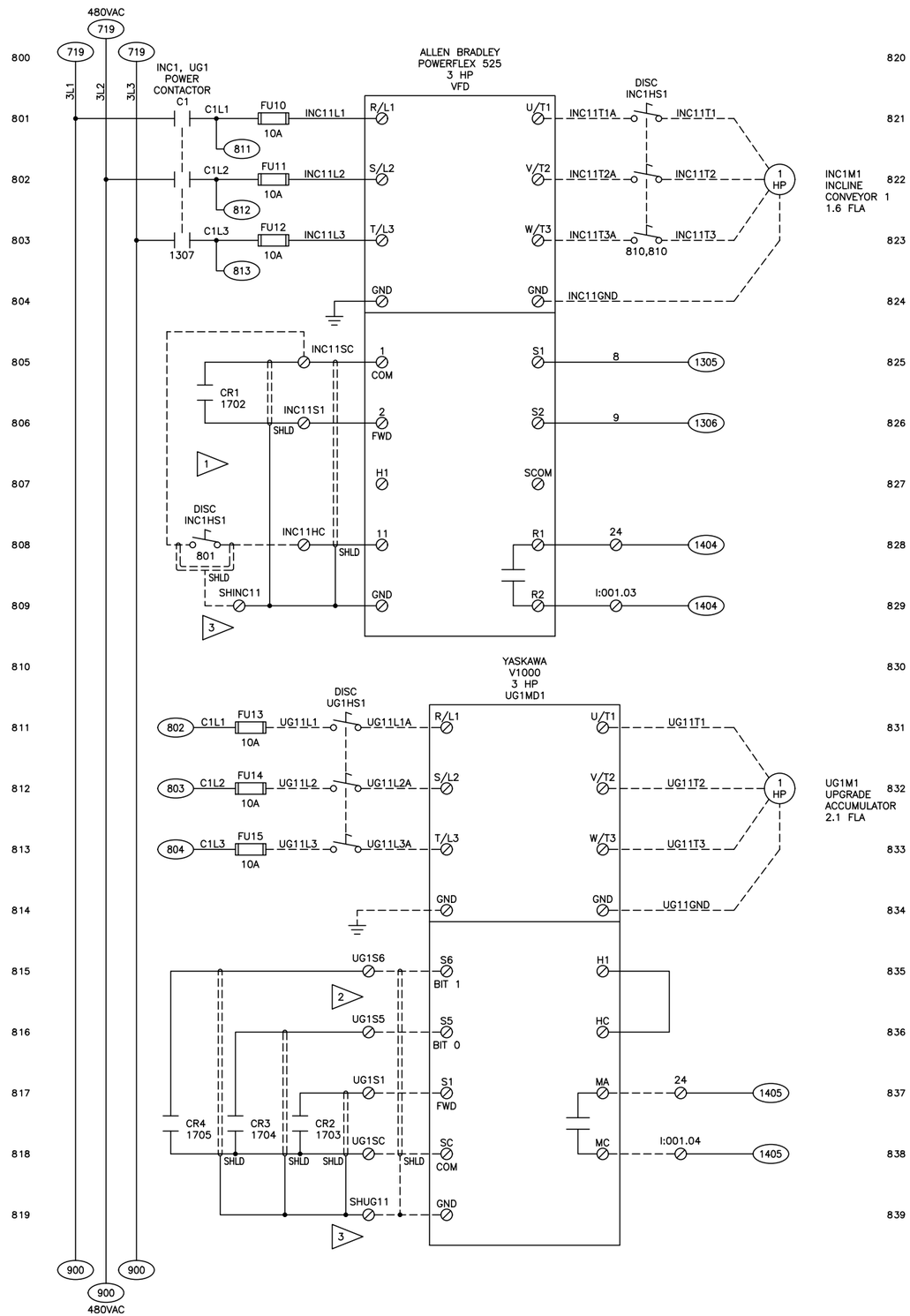

1. REQUIRED NORMALLY OPEN EARLY BREAK (N.O.E.B.) AUXILIARY CONTACT WIRED TO VFD ENABLE INPUT. SHIELDED CABLE TO BE RUN IN SEPARATE CONDUIT.

2.

ACCUMULATION SPEEDS			
BIT			
0	1		
S5	S6		
1	0	PRESET SPEED 1 FAST	60HZ
0	1	PRESET SPEED 2 MEDIUM	50HZ
1	1	PRESET SPEED 3 SLOW	40HZ

3. SHOP NOTE: DO NOT CONNECT SHIELD TO PANEL GROUND.
FIELD NOTE: SHIELDED CABLE GROUNDED AT VFD.

REV.	DESCRIPTION	BY	DATE
–	COMPLETELY REDRAWN	NS	2–5–26

REVISIONS

AUTOMATION SOLUTIONS OF AMERICA
1390 GATEWAY BLVD
BELOIT, WI
A DIVISION OF:
THE MORSE GROUP
WWW.THEMORSEGROUP.COM

PROJECT TITLE:
FRITO LAY TC–2
AUSTIN TEXAS
MAIN CONTROL PANEL – CP1

SHEET TITLE:
POWER DISTRIBUTION
INCLINE CONVEYOR 1 & UPGRADE ACCUMULATOR

DATE:	DESIGNED BY:	DRAWN BY:
2–5–26	JM	DH
JOB NUMBER: 103065	ACAD FILE NUMBER: 103065–E08	SHEET NO: 8 of 23

Plot Date: 02–05–2026
Drawing Name: 103065–E08

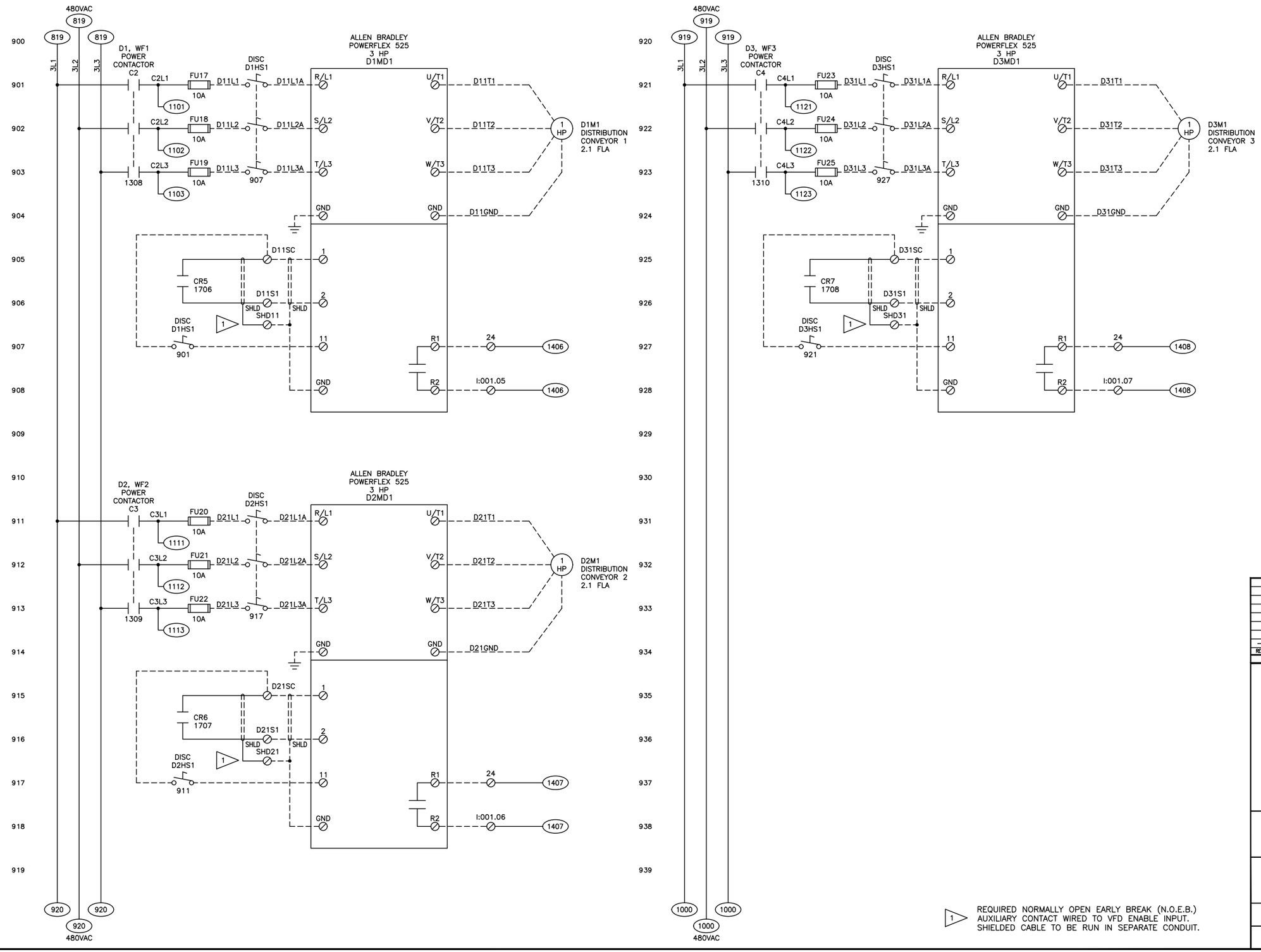

1 REQUIRED NORMALLY OPEN EARLY BREAK (N.O.E.B.) AUXILIARY CONTACT WIRED TO VFD ENABLE INPUT. SHIELDED CABLE TO BE RUN IN SEPARATE CONDUIT.

REV.	DESCRIPTION	BY	DATE
–	COMPLETELY REDRAWN	NS	2–5–26

REVISIONS

ASA
AUTOMATION SOLUTIONS OF AMERICA
1390 GATEWAY BLVD
BELOIT, WI
A DIVISION OF:
THE MORSE GROUP
WWW.THEMORSEGROUP.COM

PROJECT TITLE:
FRITO LAY TC–2
AUSTIN TEXAS
MAIN CONTROL PANEL – CP1

SHEET TITLE:
POWER DISTRIBUTION
DISTRIBUTION CONVEYOR 1, 2 & 3

DATE:	DESIGNED BY:	DRAWN BY:
2–5–26	JM	DH
JOB NUMBER: 103065	ACAD FILE NUMBER: 103065–E09	SHEET NO: 9 of 23

Plot Date: 02–05–2026
Drawing Name: 103065–E09

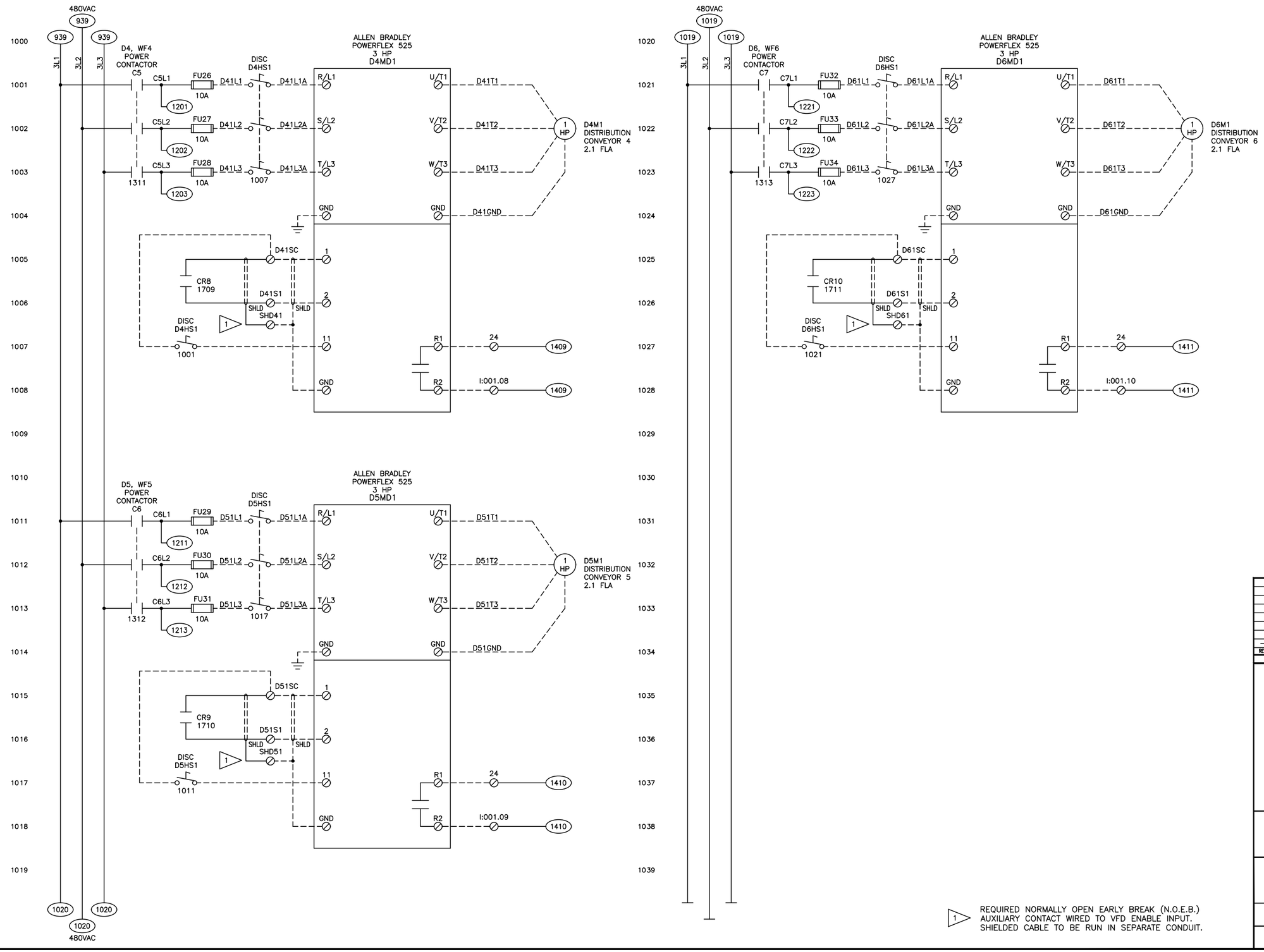

1 REQUIRED NORMALLY OPEN EARLY BREAK (N.O.E.B.) AUXILIARY CONTACT WIRED TO VFD ENABLE INPUT. SHIELDED CABLE TO BE RUN IN SEPARATE CONDUIT.

REV.	DESCRIPTION	BY	DATE
–	COMPLETELY REDRAWN	NS	2–5–26

REVISIONS

ASA
AUTOMATION SOLUTIONS OF AMERICA
1390 GATEWAY BLVD
BELOIT, WI
A DIVISION OF:
THE MORSE GROUP
WWW.THEMORSEGROUP.COM

PROJECT TITLE:
FRITO LAY TC–2
AUSTIN TEXAS
MAIN CONTROL PANEL – CP1

SHEET TITLE:
POWER DISTRIBUTION
DISTRIBUTION CONVEYOR 4, 5 & 6

DATE:	DESIGNED BY:	DRAWN BY:
2–5–26	JM	DH
JOB NUMBER: 103065	ACAD FILE NUMBER: 103065–E10	SHEET NO: 10 of 23

Plot Date: 02–05–2026
Drawing Name: 103065–E10

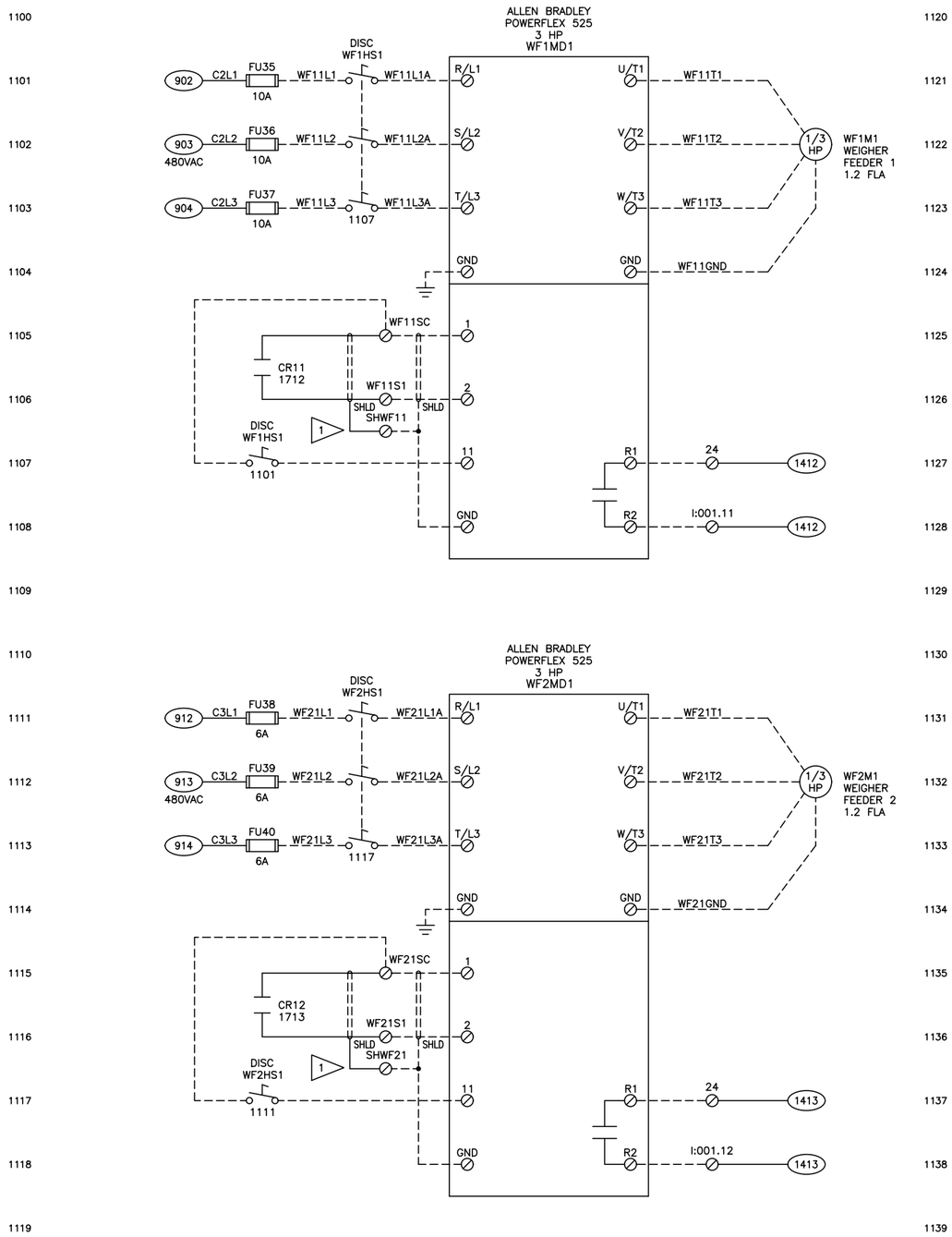

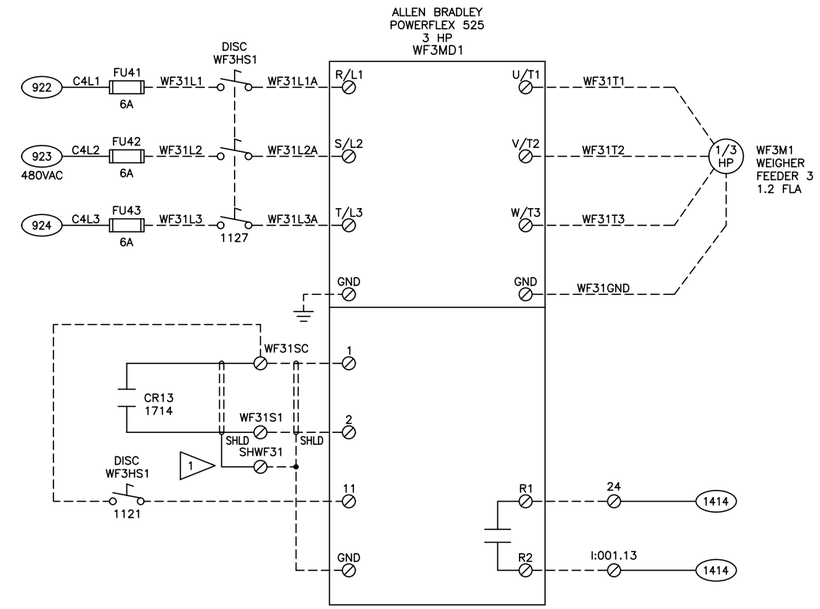

1 REQUIRED NORMALLY OPEN EARLY BREAK (N.O.E.B.) AUXILIARY CONTACT WIRED TO VFD ENABLE INPUT. SHIELDED CABLE TO BE RUN IN SEPARATE CONDUIT.

REV.	DESCRIPTION	BY	DATE
–	COMPLETELY REDRAWN	NS	2–5–26

REVISIONS

AUTOMATION SOLUTIONS OF AMERICA
1390 GATEWAY BLVD
BELOIT, WI

A DIVISION OF:

THE MORSE GROUP
WWW.THEMORSEGROUP.COM

PROJECT TITLE:
FRITO LAY TC–2
AUSTIN TEXAS
MAIN CONTROL PANEL – CP1

SHEET TITLE:
POWER DISTRIBUTION
WEIGHER FEEDER 1, 2 & 3

DATE:	DESIGNED BY:	DRAWN BY:
2–5–26	JM	DH
JOB NUMBER: 103065	ACAD FILE NUMBER: 103065–E11	SHEET NO: 11 of 23

Plot Date: 02–05–2026
Drawing Name: 103065–E11

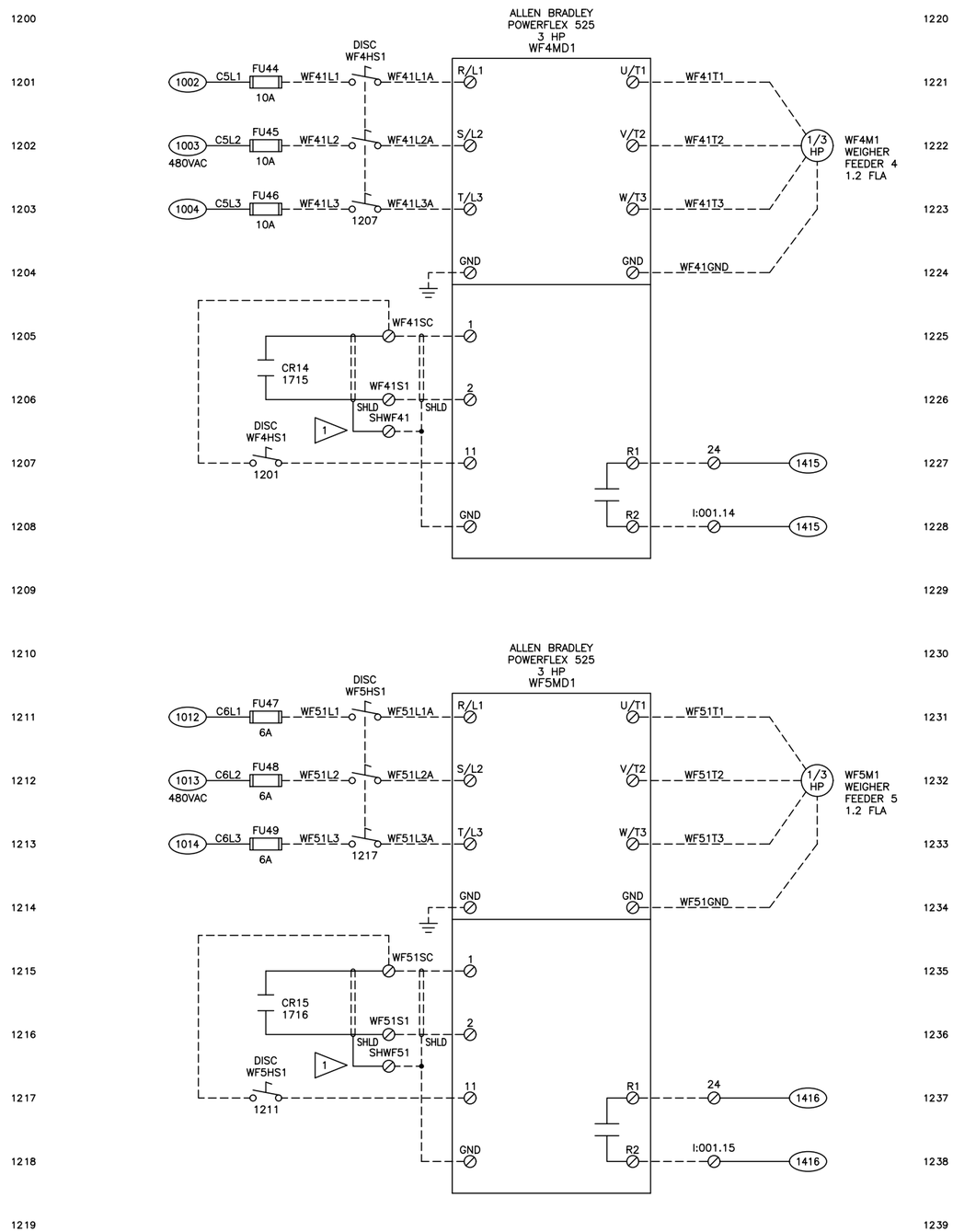

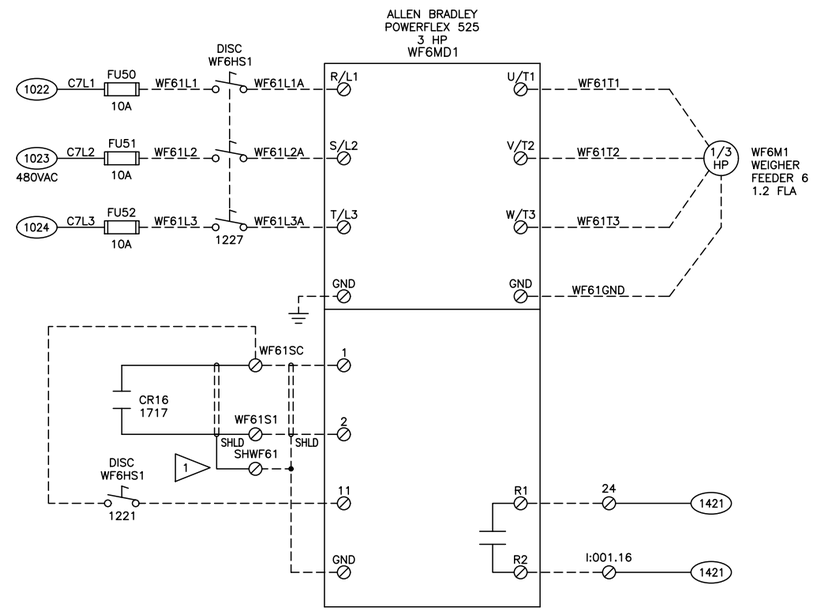

1 REQUIRED NORMALLY OPEN EARLY BREAK (N.O.E.B.) AUXILIARY CONTACT WIRED TO VFD ENABLE INPUT. SHIELDED CABLE TO BE RUN IN SEPARATE CONDUIT.

REV.	DESCRIPTION	BY	DATE
–	COMPLETELY REDRAWN	NS	2–5–26

REVISIONS

AUTOMATION SOLUTIONS OF AMERICA
1390 GATEWAY BLVD
BELOIT, WI

A DIVISION OF:

THE MORSE GROUP
WWW.THEMORSEGROUP.COM

PROJECT TITLE:
FRITO LAY TC–2
AUSTIN TEXAS
MAIN CONTROL PANEL – CP1

SHEET TITLE:
POWER DISTRIBUTION
WEIGHER FEEDER 4, 5 & 6

DATE:	DESIGNED BY:	DRAWN BY:
2–5–26	JM	DH
JOB NUMBER: 103065	ACAD FILE NUMBER: 103065–E12	SHEET NO: 12 of 23

Plot Date: 02–05–2026
Drawing Name: 103065–E12

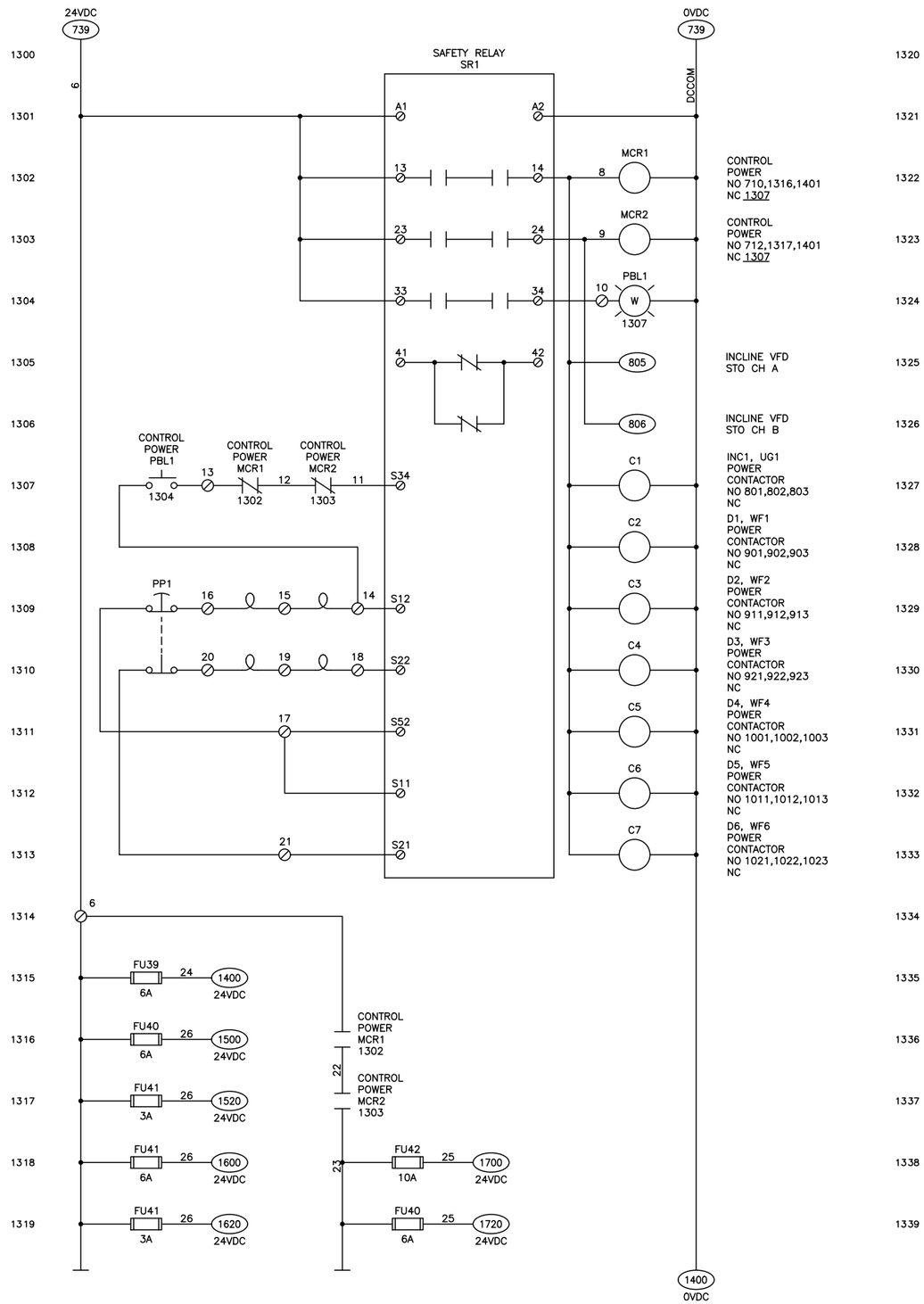

REV.	DESCRIPTION	BY	DATE
–	COMPLETELY REDRAWN	NS	2–5–26

REVISIONS

ASA

AUTOMATION SOLUTIONS OF AMERICA
1390 GATEWAY BLVD
BELOIT, WI

A DIVISION OF:

THE MORSE GROUP
WWW.THEMORSEGROUP.COM

PROJECT TITLE:
FRITO LAY TC–2
AUSTIN TEXAS
MAIN CONTROL PANEL – CP1

SHEET TITLE:
CONTROL SCHEMATIC
SAFETY RELAY & CONTROL POWER

DATE:	DESIGNED BY:	DRAWN BY:
2–5–26	JM	DH
JOB NUMBER: 103065	ACAD FILE NUMBER: 103065–E13	SHEET NO: 13 of 23

Plot Date: 02–05–2026
Drawing Name: 103065–E13

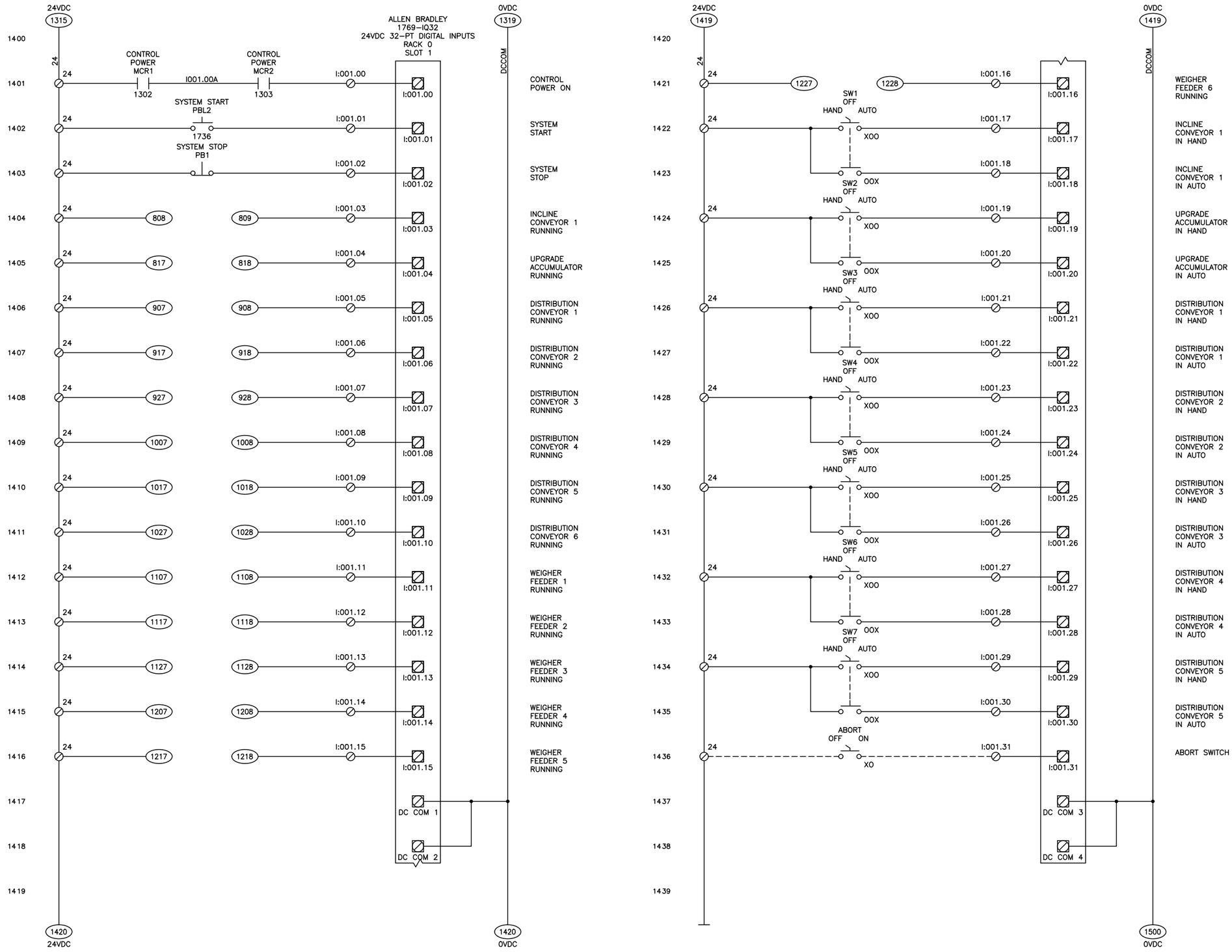

REV.	DESCRIPTION	BY	DATE
–	COMPLETELY REDRAWN	NS	2-5-26

REVISIONS

AUTOMATION SOLUTIONS OF AMERICA
1390 GATEWAY BLVD
BELOIT, WI

A DIVISION OF:

THE MORSE GROUP
WWW.THEMORSEGROUP.COM

PROJECT TITLE:
FRITO LAY TC-2
AUSTIN TEXAS
MAIN CONTROL PANEL – CP1

SHEET TITLE:
CONTROL SCHEMATIC
24VDC DIGITAL INPUTS, RACK 0, SLOT 1

DATE:	DESIGNED BY:	DRAWN BY:
2-5-26	JM	DH
JOB NUMBER:	ACAD FILE NUMBER:	SHEET NO:
103065	103065-E14	14 of 23

Plot Date: 02-05-2026
Drawing Name: 103065-E14

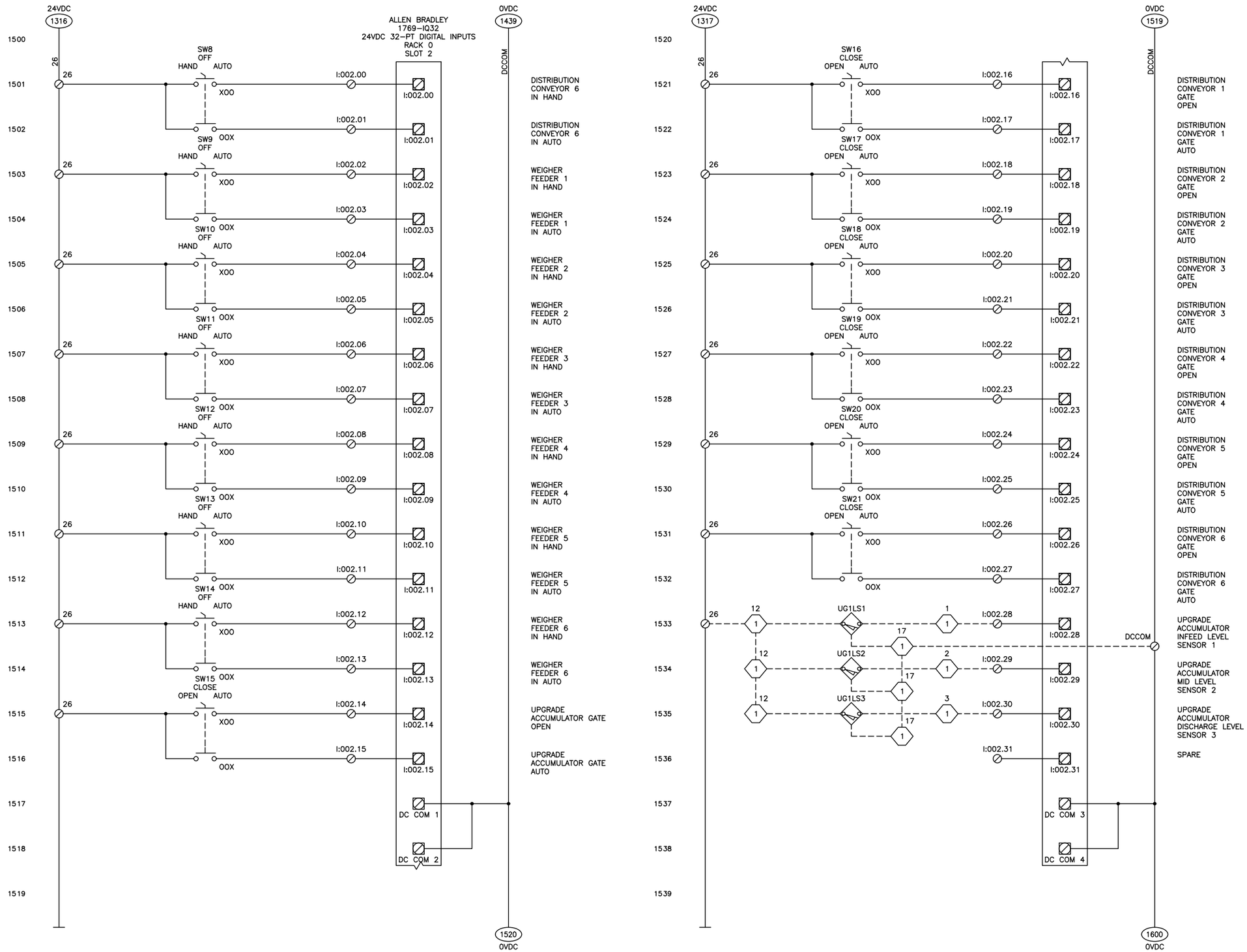

REV.	DESCRIPTION	BY	DATE
–	COMPLETELY REDRAWN	NS	2–5–26

REVISIONS

ASA

AUTOMATION SOLUTIONS OF AMERICA
1390 GATEWAY BLVD
BELOIT, WI

A DIVISION OF:

THE MORSE GROUP
WWW.THEMORSEGROUP.COM

PROJECT TITLE:
FRITO LAY TC–2
AUSTIN TEXAS
MAIN CONTROL PANEL – CP1

SHEET TITLE:
CONTROL SCHEMATIC
24VDC DIGITAL INPUTS, RACK 0, SLOT 2

DATE:	DESIGNED BY:	DRAWN BY:
2–5–26	JM	DH
JOB NUMBER:	ACAD FILE NUMBER:	SHEET NO:
103065	103065–E15	15 of 23

Plot Date: 02–05–2026
Drawing Name: 103065–E15

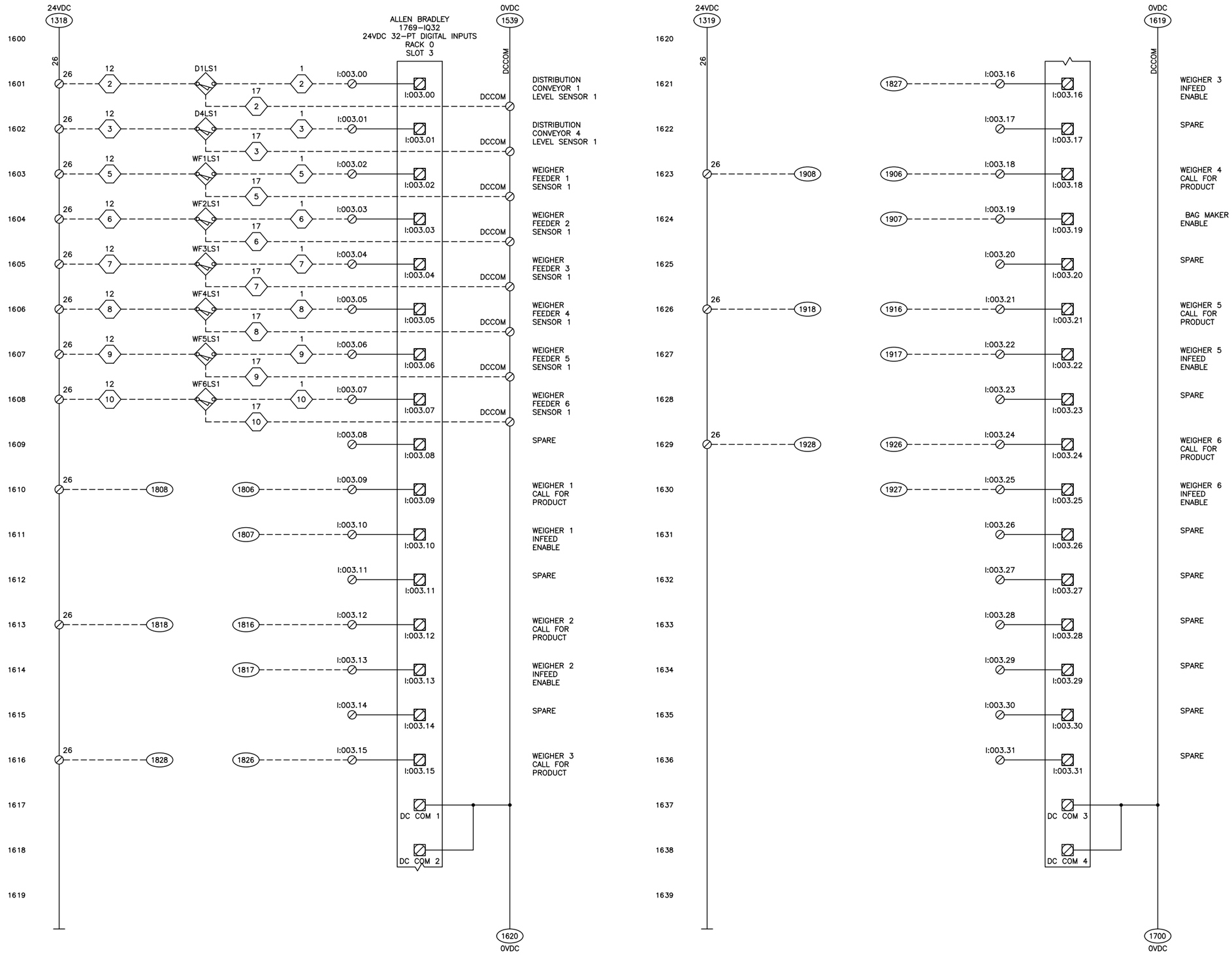

REV.	DESCRIPTION	BY	DATE
–	COMPLETELY REDRAWN	NS	2-5-26

REVISIONS

ASA

AUTOMATION SOLUTIONS OF AMERICA
1390 GATEWAY BLVD
BELOIT, WI

A DIVISION OF:

THE MORSE GROUP
WWW.THEMORSEGROUP.COM

PROJECT TITLE:
FRITO LAY TC-2
AUSTIN TEXAS
MAIN CONTROL PANEL – CP1

SHEET TITLE:
CONTROL SCHEMATIC
24VDC DIGITAL INPUTS, RACK 0, SLOT 3

DATE:	DESIGNED BY:	DRAWN BY:
2-5-26	JM	DH
JOB NUMBER:	ACAD FILE NUMBER:	SHEET NO:
103065	103065-E16	16 of 23

Plot Date: 02-05-2026
Drawing Name: 103065-E16

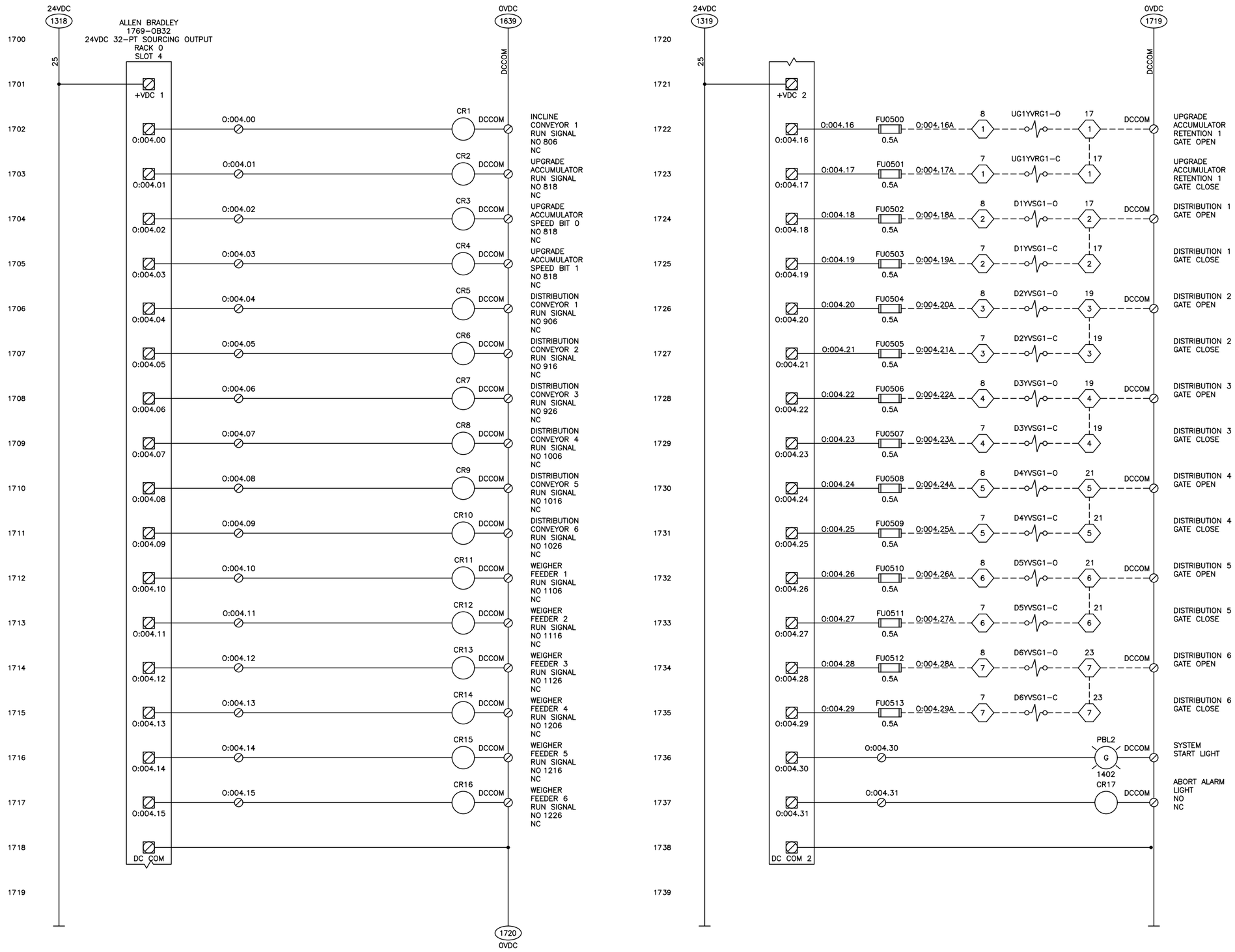

REV.	DESCRIPTION	BY	DATE
–	COMPLETELY REDRAWN	NS	2–5–26

REVISIONS

ASA

AUTOMATION SOLUTIONS OF AMERICA
1390 GATEWAY BLVD
BELOIT, WI

A DIVISION OF:

THE MORSE GROUP
WWW.THEMORSEGROUP.COM

PROJECT TITLE:
FRITO LAY TC–2
AUSTIN TEXAS
MAIN CONTROL PANEL – CP1

SHEET TITLE:
CONTROL SCHEMATIC
24VDC DIGITAL INPUTS, RACK 0, SLOT 4

DATE:	DESIGNED BY:	DRAWN BY:
2–5–26	JM	DH
JOB NUMBER:	ACAD FILE NUMBER:	SHEET NO:
103065	103065–E17	17 of 23

Plot Date: 02–05–2026
Drawing Name: 103065–E17

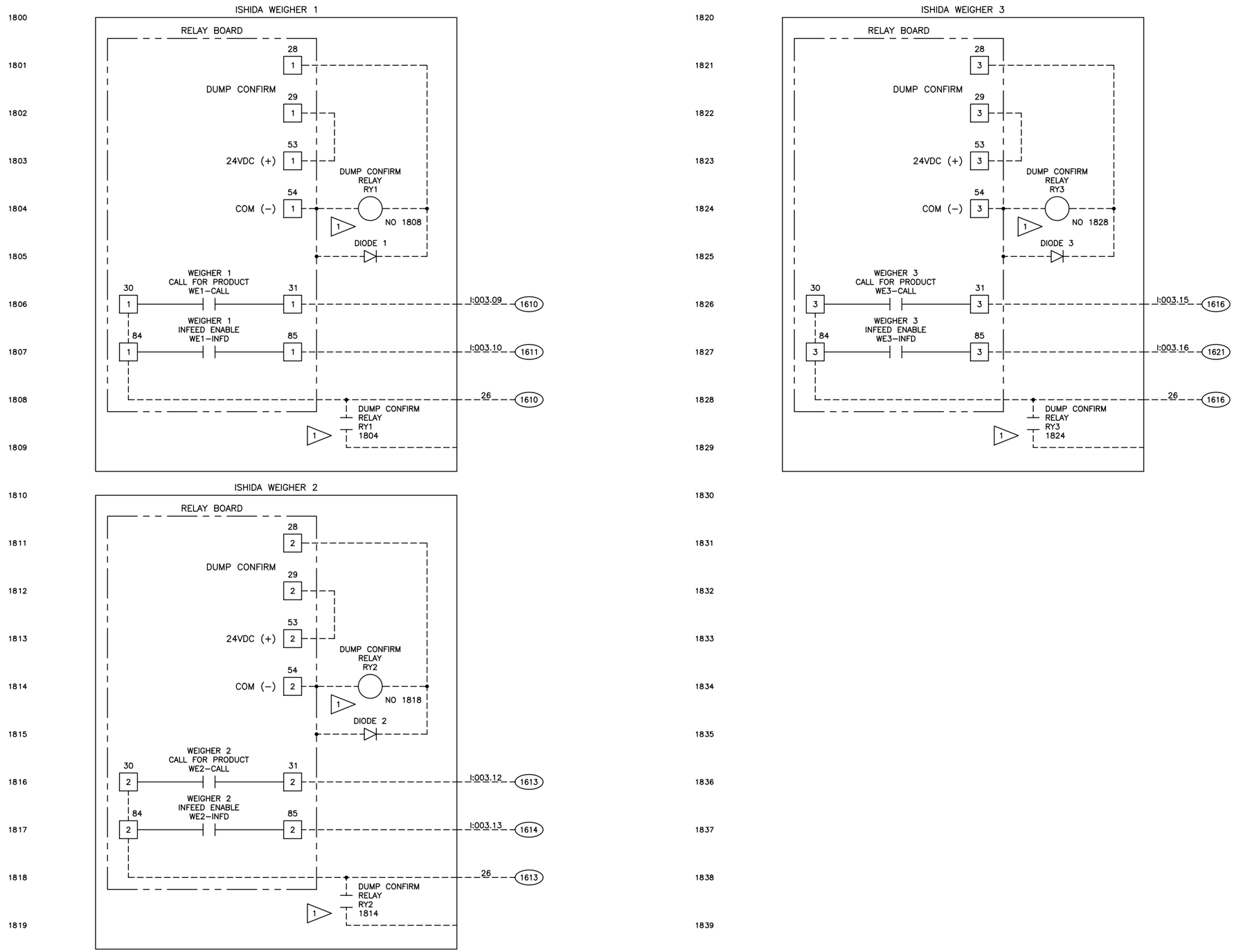

1 RELAY & DIODE TO BE SHIPPED LOOSE FOR INSTALLATION ONSITE.

REV.	DESCRIPTION	BY	DATE
–	COMPLETELY REDRAWN	NS	2–5–26

REVISIONS

AUTOMATION SOLUTIONS OF AMERICA
1390 GATEWAY BLVD
BELOIT, WI

A DIVISION OF:
THE MORSE GROUP
WWW.THEMORSEGROUP.COM

PROJECT TITLE:
FRITO LAY TC–2
AUSTIN TEXAS
MAIN CONTROL PANEL – CP1

SHEET TITLE:
CONTROL SCHEMATIC
WEIGHER RELAY BOARD 1, 2 & 3

DATE:	DESIGNED BY:	DRAWN BY:
2–5–26	JM	DH
JOB NUMBER: 103065	ACAD FILE NUMBER: 103065–E18	SHEET NO: 18 of 23

Plot Date: 02–05–2026
Drawing Name: 103065–E18

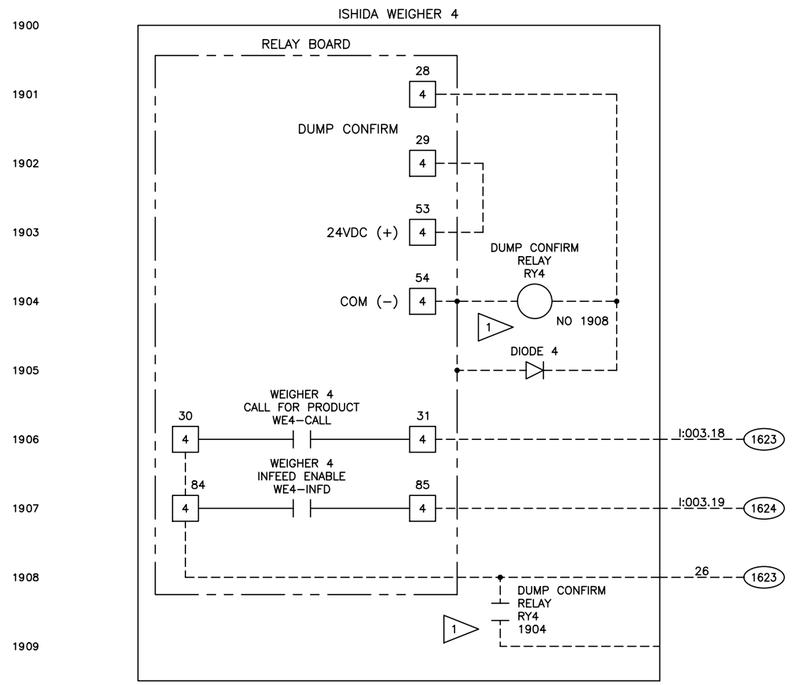

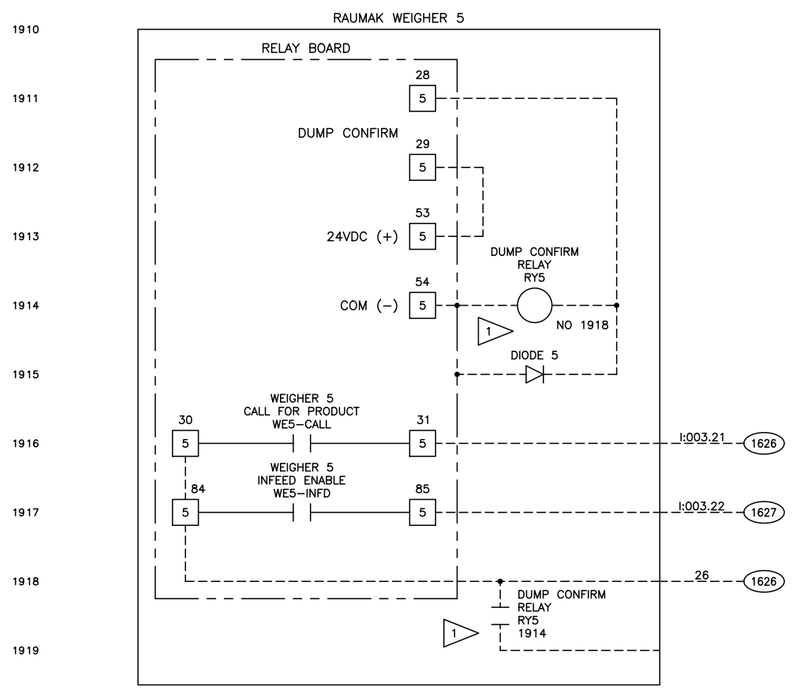

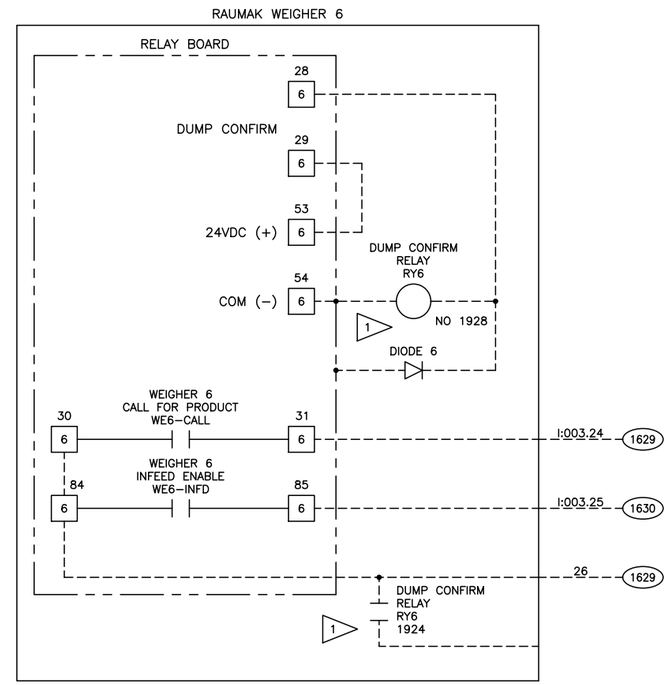

1 RELAY & DIODE TO BE SHIPPED LOOSE FOR INSTALLATION ONSITE.

REV.	DESCRIPTION	BY	DATE
–	COMPLETELY REDRAWN	NS	2–5–26

REVISIONS

AUTOMATION SOLUTIONS OF AMERICA
1390 GATEWAY BLVD
BELOIT, WI

A DIVISION OF:
THE MORSE GROUP
WWW.THEMORSEGROUP.COM

PROJECT TITLE:
FRITO LAY TC–2
AUSTIN TEXAS
MAIN CONTROL PANEL – CP1

SHEET TITLE:
CONTROL SCHEMATIC
WEIGHER RELAY BOARD 4, 5 & 6

DATE:	DESIGNED BY:	DRAWN BY:
2–5–26	JM	DH
JOB NUMBER: 103065	ACAD FILE NUMBER: 103065–E19	SHEET NO: 19 of 23

Plot Date: 02–05–2026
Drawing Name: 103065–E19

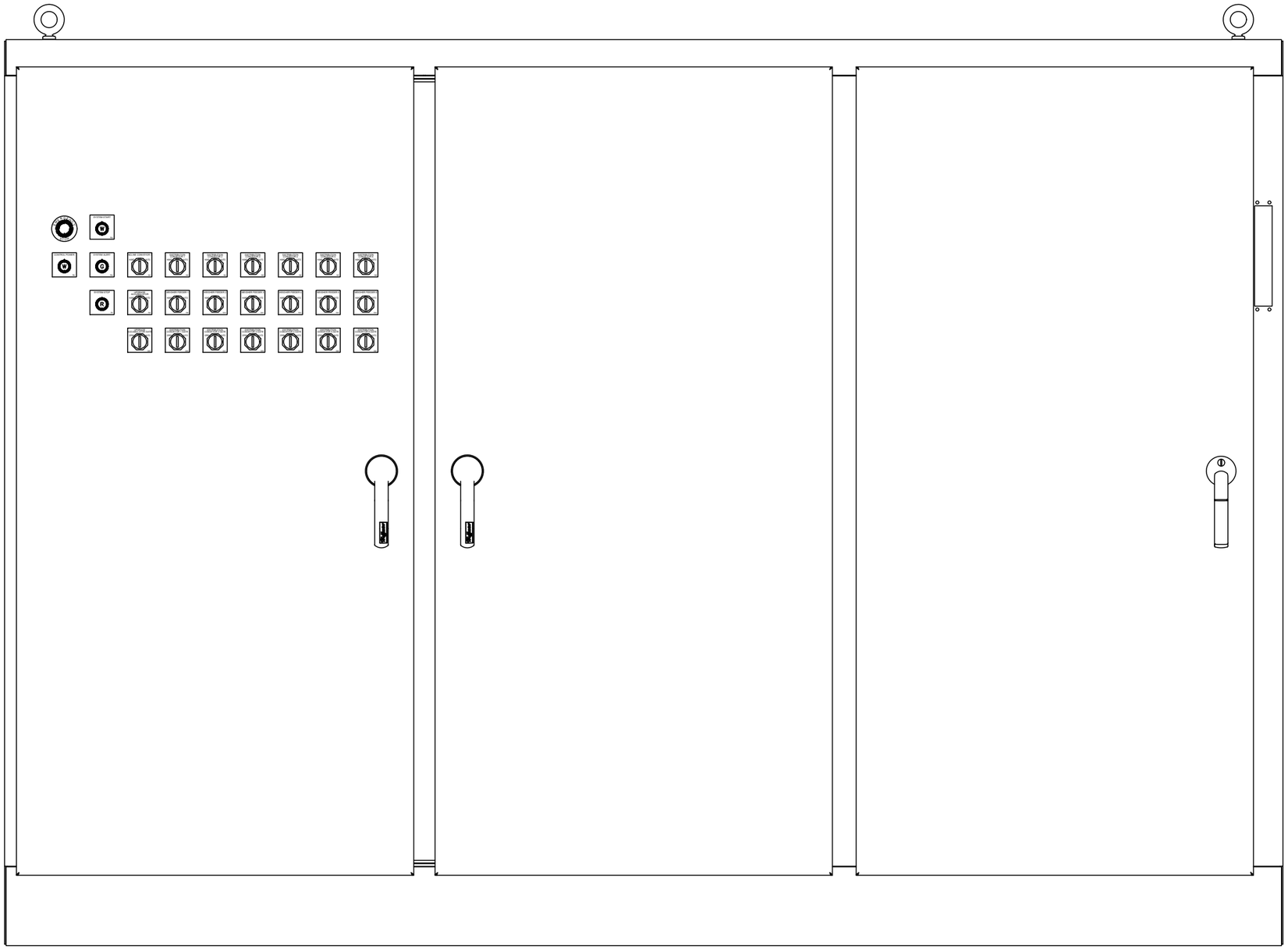

REV.	DESCRIPTION	BY	DATE
–	COMPLETELY REDRAWN	NS	2–5–26

REVISIONS

AUTOMATION SOLUTIONS OF AMERICA
1390 GATEWAY BLVD
BELOIT, WI

A DIVISION OF:

THE MORSE GROUP
WWW.THEMORSEGROUP.COM

PROJECT TITLE:
FRITO LAY TC–2
AUSTIN TEXAS
MAIN CONTROL PANEL – CP1

SHEET TITLE:
PANEL LAYOUT

DATE:	DESIGNED BY:	DRAWN BY:
2–5–26	JM	DH
JOB NUMBER: 103065	ACAD FILE NUMBER: 103065–E20	SHEET NO: 20 of 23

Plot Date: 02–05–2026
Drawing Name: 103065–E20

				Incline Conv
				INC1M1
**PARAM	DESCRIPTION	RANGE	FACTORY	**AB 525, 3HP**
		MIN / MAX	SETTING	SETTING
P030	LANGUAGE	1 / 15	1 "ENGLISH"	1 "ENGLISH"
P031	MOTOR NP VOLTS	20 / RATED VOLTS	DRIVE RATED	460
P032	MOTOR NP HERTZ	15 / 500 HZ	60 HZ	60
P033	MOTOR OL CURRENT	0.0 / RATED AMPS X 2	DRIVE RATED AMPS	2
P034	MOTOR NP FLA	0.1 / RATED AMPS	DRIVE RATING	1.6
P035	MOTOR NP POLES	2 - 40 / 40	4	
P036	MOTOR NP RPM	0 / 2400 RPM	1750 RPM	1730
P037	MOTOR NP POWER	0 / DRIVE RATED POWER	DRIVE RATED POWER	0.75 Kw, (1 HP)
P039	TORQUE PERF MODE	0 / 3	1 (SVC)	
P040	AUTOTUNE	0 / 2	0 (READY/IDLE)	
P041	ACCEL TIME 1	0.00 / 600.00 SEC	10.00 SEC	2.00
P042	DECEL TIME 1	0.00 / 600.00 SEC	10.00 SEC	2.00
P043	MINIMUM FREQ	0.00 / 500.00 HZ	0.00 HZ	0.00
P044	MAXIMUM FREQ	0.00 / 500.00 HZ	60.00 HZ	60.00
P045	STOP MODE	0 / 11	0 (RAMP, CF)	
P046	START SOURCE 1	1 / 5	1 (KEYPAD)	5 (ETHERNET)
P047	SPEED REFERENCE1	1 / 16	15 (ETHERNET)	7 (PRESET FREQ)
P048	START SOURCE 2	1 / 5	2 (DIGIN TRMBLK)	
P049	SPEED REFERENCE2	1 / 16	5 (0-10V INPUT)	
P050	START SOURCE 3	1 / 5	5 (ETHERNET/IP)	
P051	SPEED REFERENCE3	1 / 16	15 (ETHERNET/IP)	
P053	RESET TO DEFALTS	0 / 3	0 (READY/IDLE)	
t062	DIGIN TERMBLK 2	0 / 52	48 (2-WIRE FWD)	
t063	DIGIN TERMBLK 3	0 / 52	50 (2-WIRE REV)	
t064	2-WIRE MODE	0 / 3	0 (EDGE TRIGGER)	
t065	DIGIN TERMBLK 5	0 / 52	7 (PRESET FREQUENCY)	
t066	DIGIN TERMBLK 6	0 / 52	7 (PRESET FREQUENCY)	
t067	DIGIN TERMBLK 7	0 / 52	5 (SPD + STRT 2)	
t068	DIGIN TERMBLK 8	0 / 52	9 (JOG FORWARD)	
t076	RELAY OUT1 SEL	0 / 29	0 (READY/FAULT)	2
t081	RELAY OUT2 SEL	0 / 29	2 (MOTOR RUNNING)	2
t105	SAFETY OPEN EN	0 / 1	0 (FAULT ENABLE)	1
C128	EN ADDR SEL	1 / 2	2 (BOOTP)	1 (PARAMETERS)
C129	EN IP ADDR CFG 1	0 / 255	0	192
C130	EN IP ADDR CFG 2	0 / 255	0	168
C131	EN IP ADDR CFG 3	0 / 255	0	1
C132	EN IP ADDR CFG 4	0 / 255	0	100
C133	EN SUBNET CFG 1	0 / 255	0	255
C134	EN SUBNET CFG 2	0 / 255	0	255
C135	EN SUBNET CFG 3	0 / 255	0	255
C136	EN SUBNET CFG 4	0 / 255	0	0
C141	EN RATE CFG	0 / 4	0 (AUTODETECT)	
C143	EN COMM FLT ACTN	0 / 4	0 (FAULT)	1 (STOP)
C144	EN IDLE FLT ACTN	0 / 4	0 (FAULT)	1 (STOP)
C157	EN DATA OUT 1	0 / 800	0	43 (MIN FREQUENCY)
C158	EN DATA OUT 2	0 / 800	0	44 (MAX FREQUENCY)
C159	EN DATA OUT 3	0 / 800	0	7 (FAULT)
A410	PRESET FREQ 0	0.00/500.00	0.00	60.00
A411	PRESET FREQ 1	0.00/500.00	5.00	
A412	PRESET FREQ 2	0.00/500.00	10.00	
A413	PRESET FREQ 3	0.00/500.00	20.00	
A431	JOG FREQUENCY	0.00 / 500.00 HZ	10.00 HZ	
A434	DC BRAKE TIME	0.0 / 99.9 SEC	0.0 SEC	
A435	DC BRAKE LEVEL	0.0 / (RATED AMPS X 1.8)	(DRIVE RATED AMPS X 0.5)	
A440	PWM FREQUENCY	2.0/16.0 KHz	4 KHz	2 KHz
A442	ACCEL TIME 2	0.00 / 600.00 SEC	10.00 SEC	
A443	DECEL TIME 2	0.00 / 600.00 SEC	10.00 SEC	
A484	CURRENT LIMIT 1	Drive Rated Amps x 1.1	Drive Rated Amps x 1.1	1.7
A486	SHEAR PIN 1 LEVEL	0.0 / (RATED AMPS X 2)	0.0A	
A487	SHEAR PIN 1 TIME	0.00 / 30.00 SEC	0.00 SEC	
A530	BOOST SELECT	0 / 14	DRIVE TYPE	
A531	START BOOST	0.0 / 25.0 %	2.5 %	
A532	BREAK VOLTAGE	0.0 / 100.0 %	25.0 %	
A533	BREAK FREQUENCY	0.0 / 500.0 HZ	15.0 HZ	
A534	MAXIMUM VOLTAGE	20 / 510 VAC (460V DRIVES)	DRIVE RATED	
A543	START AT POWER UP	0 / 1	0 (DISABLED)	
A544	REVERSE DISABLE	0 / 1	0 (REV ENABLED)	

PARAMETER	NAME	SETTING RANGE	FACTORY SETTING	UPGRADE ACCUMULATOR	
				UG1M1	
				YASKAWA V1000, VFD, 3 HP	
b1-01	Frequency Reference Selection 1	0 to 4	1	0 (SINGLE SPEED)	
b1-02	Run Method Selection	0 to 3	1		
b1-03	Stopping Method Selection	0 to 3	0		
b1-04	Reverse Operation Selection	0 to 1	0	1 (REVERSE DISABLED)	
b1-17	Run Command at Power Up	0 to 1	0	1 (RUN AT POWER UP)	
b2-02	DC Injection Braking Current	0 to 75	50%		
b2-03	DC Injection Braking Time at Start	0.00 to 10.00	0.50 sec	0	
b2-04	DC Injection Braking Time at Stop	0.00 to 10.00	0.50 sec	0	
b8-01	Energy Saving Control Selection	0 to 1	0	0	
C1-01	Acceleration Time 1	0.0 to 6000.0	10.0 sec	0.6 sec	
C1-02	Deceleration Time 1	0.0 to 6000.0	10.0 sec	1.0 sec	
C1-03	Acceleration Time 2	0.0 to 6000.0	10.0 sec		
C1-04	Deceleration Time 2	0.0 to 6000.0	10.0 sec		
C2-03	S-Curve Characteristic at Decel Start	0.00 to 10.00 sec	0.20 sec		
C4-01	Torque Compensation Gain	0.00 to 2.50	1.00	0.00	
C6-01	Normal/Heavy Duty Selection	0 to 1	1	0 (HEAVY DUTY)	
C6-02	Carrier Frequency Selection	1 to F	<1>	1 (2.0 kHz)	
D1-01	Frequency Reference 1	0.00 to 400.00 Hz	0.00 Hz	60.00 Hz	
D1-02*	Frequency Reference 2	0.00 to 400.00 Hz	0.00 Hz	60.00 Hz	
D1-03*	Frequency Reference 3	0.00 to 400.00 Hz	0.00 Hz	50.00 Hz	
D1-04*	Frequency Reference 4	0.00 to 400.00 Hz	0.00 Hz	40.00 Hz	
D3-01**	Jump Frequency 1	0.00 to 400.00 Hz	0.0 Hz	14.0 Hz	
D3-04**	Jump Frequency Width	0.0 to 20.0 Hz	1.0 Hz	14.0 Hz	
E1-03	V/f Pattern Selection	0 to F	F		
E1-04	Max Output Frequency	40.0 to 400.0	60 Hz <3>	60.0	
E1-05	Max Output Voltage	0.0 to 255.0 <2>	230 V <3>	260 (460 VAC)	
E1-06	Base Frequency	0.0 to E1-04	60 Hz <3>	60.0	
E1-07	Mid Output Frequency	0.0 to E1-04	3 Hz <3>		
E1-09	Minimum Output Frequency	0.0 to E1-04	1.5 Hz <3> <11>		
E2-01	Motor Rated Current	10 to 200% of DRC	<4>	2.0 (460 VAC)	
E2-03	Motor No-Load Current	0 to less than E2-01	<4>		
E2-04	Number of Motor Poles	2 to 48	4 poles	6	
E2-11	Motor Rated Output	0.00 to 650.00	0.40 kW <5>	0.75 Kw, (1 HP)	
F6-01****	Communications Error Operation Selection	0 to 5	1		
F6-03****	External Fault from Comm. Option Operation Selection	0 to 3	1		
H1-07	Multi-Function Digital Input Terminal S7 Function Selection	1 to 9F <12>	6 (4) <13>		
H2-01	Terminal MA, MB and MC Function Selection <relay>	0 to 192 <7>	E	0 - DURING RUN	
H3-02**	Terminal A1 Function Selection	0 to 31	0	F	
H3-04**	Terminal A1 Bias Setting	-999.9 to 999.9	0.0%	0	
H3-09**	Terminal A2 Function Selection	0 to 3	2	2	
H3-12**	Terminal A2 Input Bias	-999.9 to 999.9	0.0%	47	
L1-01	Motor Overload Protection Selection	0 to 4	1 <11>	N/A	
L2-01	Momentary Power Loss Operation Selection	0 to 2	0	1 (ENABLE/RECOVER)	
L3-01	Stall Prevention Selection during Acceleration	0 to 2 <8>	1	0 (DISABLED)	
L3-04	Stall Prevention Selection during Deceleration	0 to 4	1	0 (DISABLED)	
L3-05	Stall Prevention Selection during Run	0 to 2	1	0 (DISABLED)	
L5-01	Number of Auto Restarts	0 to 10	0	1	
L6-01	Torque Detection Selection 1	0 to 8	0		
L6-02	Torque Detection Level 1	0 to 300	150%		
L6-03	Torque Detection Time 1	0.0 to 10.0	0.1s		
L8-05	Input Phase Loss Protection Selection	0 or 1	1	0 (DISABLED)	
L8-35	Installation Method Selection	0 to 3 <9>	2	1 (SIDE BY SIDE)	
o3-02	Copy Function READ Permission	0 to 1	0	1 (COPY ALLOWED)	

* OPTIONAL FOR MULTI–SPEED APPLICATIONS USING PRESET SPEEDS.
** OPTIONAL FOR VARIABLE SPEED APPLICATIONS USING A 4–20mA REFERENCE SIGNAL.
*** VARY SPEED AS REQUIRED FOR BEST OPERATION. IF OPERATING HIGHER THAN 60HZ, ADJUST VARIABLE E1–04.
**** FOR USE OF ETHERNET COMMUNICATION OPTION.

<1> Default setting value is dependent on parameters o2–04, Drive Model Selection, A1–02, Control Method Selection and C6–01, Normal/Heavy Duty selection.

<2> Values shown here are for 200 V class drives. Double the value when using a 400 V class drive.

<3> Default setting value is dependent on parameter E5–01, Motor Code Selection.

<4> Default setting value is dependent on parameter o2–04, Drive Model Selection and C6–01, Drive Duty Selection.

<5> Default setting value is dependent on parameter o2–04, Drive Model Selection.

<6> Default setting value is dependent on parameter E1–01, Input Voltage Setting.

<7> The availability of certain functions depends on the control method used.

<8> Setting value 2 is not available A1–02 = 5–PM OLV Control. When enabled, the drive stops accelerating when it exceeds the value of L3–02, Stall Prevention Level. The drive decelerates after 100 ms and begins accelerating gain after restoring the current level.

<9> Parameter setting value is not reset to the default value during drive initialization, A1–03 = 1110, 2220, 3330.

<10> Switch between current or voltage inputs by using DIP switch S1–2 switch on the terminal board.

<11> Default setting value is dependent on parameter A1–02, Control Method Selection. The value shown is for A1–02 = 0–V/f Control.

<12> The availability of certain functions depends on the control method used.

<13> Parenthetical value is the default when parameter A1–03 = 3330 3–Wire Initialization.

REV.	DESCRIPTION	BY	DATE
–	COMPLETELY REDRAWN	NS	2–5–26

REVISIONS

AUTOMATION SOLUTIONS OF AMERICA
1390 GATEWAY BLVD
BELOIT, WI

A DIVISION OF:
THE MORSE GROUP
WWW.THEMORSEGROUP.COM

PROJECT TITLE:
FRITO LAY TC–2
AUSTIN TEXAS
MAIN CONTROL PANEL – CP1

SHEET TITLE:
SET–UP PARAMETERS

DATE:	DESIGNED BY:	DRAWN BY:
2–5–26	JM	DH
JOB NUMBER: 103065	ACAD FILE NUMBER: 103065–E21	SHEET NO: 21 of 23

Plot Date: 02–05–2026
Drawing Name: 103065–E21

			WEIGHER DISTRIBUTION 1	WEIGHER DISTRIBUTION 2	WEIGHER DISTRIBUTION 3	WEIGHER DISTRIBUTION 4	WEIGHER DISTRIBUTION 5	WEIGHER DISTRIBUTION 6
			D1M1	D1M2	D1M3	D1M4	D1M5	D1M6
DESCRIPTION	RANGE	FACTORY	**AB 525 VFD**	**AB 525 VFD**	**AB 525 VFD**	**AB 525 VFD**	**AB 525 VFD**	**AB 525 VFD**
	MIN / MAX	SETTING	SETTING	SETTING	SETTING	SETTING	SETTING	SETTING
LANGUAGE	1 / 15	1 "ENGLISH"	1 "ENGLISH"	1 "ENGLISH"	1 "ENGLISH"	1 "ENGLISH"	1 "ENGLISH"	1 "ENGLISH"
MOTOR NP VOLTS	20 / RATED VOLTS	DRIVE RATED	460	460	460	460	460	460
MOTOR NP HERTZ	15 / 500 HZ	60 HZ	60	60	60	60	60	60
MOTOR OL CURRENT	0.0 / RATED AMPS X 2	DRIVE RATED AMPS	2.1	2.1	2.1	2.1	2	2
MOTOR NP FLA	0.1 / RATED AMPS	DRIVE RATING	1.8	1.8	1.8	1.8	1.7	1.7
MOTOR NP POLES	2 - 40 / 40	4	6	6	6	6	6	6
MOTOR NP RPM	0 / 2400 RPM	1750 RPM	1200	1200	1200	1200	1200	1200
MOTOR NP POWER	0 / DRIVE RATED POWER	DRIVE RATED POWER	0.75 Kw, (1 HP)	0.75 Kw, (1 HP)	0.75 Kw, (1 HP)	0.75 Kw, (1 HP)	0.75 Kw, (1 HP)	0.75 Kw, (1 HP)
TORQUE PERF MODE	0 / 3	1 (SVC)						
AUTOTUNE	0 / 2	0 (READY/IDLE)						
ACCEL TIME 1	0.00 / 600.00 SEC	10.00 SEC	0.50	0.50	0.50	0.50	0.50	0.50
DECEL TIME 1	0.00 / 600.00 SEC	10.00 SEC	0.50	0.50	0.50	0.50	0.50	0.50
MINIMUM FREQ	0.00 / 500.00 HZ	0.00 HZ	24.00	24.00	24.00	24.00	0.00	0.00
MAXIMUM FREQ	0.00 / 500.00 HZ	60.00 HZ	60.00	60.00	60.00	60.00	60.00	60.00
STOP MODE	0 / 11	0 (RAMP, CF)						
START SOURCE 1	1 / 5	1 (KEYPAD)	2 (DIGIN TRMBLK)	2 (DIGIN TRMBLK)	2 (DIGIN TRMBLK)	2 (DIGIN TRMBLK)	2 (DIGIN TRMBLK)	2 (DIGIN TRMBLK)
SPEED REFERENCE1	1 / 16	1 (DRIVE POT)	7 (PRESET FREQ)	7 (PRESET FREQ)	7 (PRESET FREQ)	7 (PRESET FREQ)	7 (PRESET FREQ)	7 (PRESET FREQ)
START SOURCE 2	1 / 5	2 (DIGIN TRMBLK)						
SPEED REFERENCE2	1 / 16	5 (0-10V INPUT)						
START SOURCE 3	1 / 5	5 (ETHERNET/IP)						
SPEED REFERENCE3	1 / 16	15 (ETHERNET/IP)						
RESET TO DEFALTS	0 / 3	0 (READY/IDLE)						
DIGIN TERMBLK 2	0 / 52	48 (2-WIRE FWD)						
DIGIN TERMBLK 3	0 / 52	50 (2-WIRE REV)						
2-WIRE MODE	0 / 3	0 (EDGE TRIGGER)						
DIGIN TERMBLK 5	0 / 52	7 (PRESET FREQUENCY)						
DIGIN TERMBLK 6	0 / 52	7 (PRESET FREQUENCY)						
DIGIN TERMBLK 7	0 / 52	5 (SPD + STRT 2)						
DIGIN TERMBLK 8	0 / 52	9 (JOG FORWARD)						
RELAY OUT1 SEL	0 / 29	0 (READY/FAULT)	2 (MOTOR RUNNING)	2 (MOTOR RUNNING)	2 (MOTOR RUNNING)	2 (MOTOR RUNNING)	2 (MOTOR RUNNING)	2 (MOTOR RUNNING)
RELAY OUT2 SEL	0 / 29	2 (MOTOR RUNNING)						
SAFETY OPEN EN	0 / 1	0 (FAULT ENABLE)	1 (FAULT DISABLED)	1 (FAULT DISABLED)	1 (FAULT DISABLED)	1 (FAULT DISABLED)	1 (FAULT DISABLED)	1 (FAULT DISABLED)
PRESET FREQ 0	0.00/500.00	0.00	60.00	60.00	60.00	60.00	60.00	60.00
PRESET FREQ 1	0.00/500.00	5.00	60.00	60.00	60.00	60.00	60.00	60.00
PRESET FREQ 2	0.00/500.00	10.00	50.00	50.00	50.00	50.00	45.00	45.00
PRESET FREQ 3	0.00/500.00	20.00	40.00	40.00	40.00	40.00	60.00	60.00
JOG FREQUENCY	0.00 / 500.00 HZ	10.00 HZ						
DC BRAKE TIME	0.0 / 99.9 SEC	0.0 SEC	0.5	0.5	0.5	0.5	0.5	0.5
DC BRAKE LEVEL	0.0 / (RATED AMPS X 1.8)	(DRIVE RATED AMPS X 0.5)	0.2	0.2	0.2	0.2	0.2	0.2
PWM FREQUENCY	2.0/16.0 KHz	4 KHz	2 KHz	2 KHz	2 KHz	2 KHz	2 KHz	2 KHz
ACCEL TIME 2	0.00 / 600.00 SEC	10.00 SEC	0.50	0.50	0.50	0.50	0.50	0.50
DECEL TIME 2	0.00 / 600.00 SEC	10.00 SEC	0.50	0.50	0.50	0.50	0.50	0.50
CURRENT LIMIT 1	Drive Rated Amps x 1.1	Drive Rated Amps x 1.1	2.7	2.7	2.7	2.7	2.6	2.6
SHEAR PIN 1 LEVEL	0.0 / (RATED AMPS X 2)	0.0A						
SHEAR PIN 1 TIME	0.00 / 30.00 SEC	0.00 SEC						
BOOST SELECT	0 / 14	DRIVE TYPE						
START BOOST	0.0 / 25.0 %	2.5 %						
BREAK VOLTAGE	0.0 / 100.0 %	25.0 %						
BREAK FREQUENCY	0.0 / 500.0 HZ	15.0 HZ						
MAXIMUM VOLTAGE	20 / 510 VAC (460V DRIVES)	DRIVE RATED	260	260	260	260	240	240
START AT POWER UP	0 / 1	0 (DISABLED)						
REVERSE DISABLE	0 / 1	0 (REV ENABLED)						

REV.	DESCRIPTION	BY	DATE
–	COMPLETELY REDRAWN	NS	2–5–26

REVISIONS

ASA

AUTOMATION SOLUTIONS OF AMERICA
1390 GATEWAY BLVD
BELOIT, WI

A DIVISION OF:

THE MORSE GROUP
WWW.THEMORSEGROUP.COM

PROJECT TITLE:
FRITO LAY TC–2
AUSTIN TEXAS
MAIN CONTROL PANEL – CP1

SHEET TITLE:
SET–UP PARAMETERS

DATE:	DESIGNED BY:	DRAWN BY:
2–5–26	JM	DH
JOB NUMBER: 103065	ACAD FILE NUMBER: 103065–E22	SHEET NO: 22 of 23

Plot Date: 02–05–2026

Drawing Name: 103065–E22

				WEIGHER FEEDER 1	WEIGHER FEEDER 2	WEIGHER FEEDER 3	WEIGHER FEEDER 4	WEIGHER FEEDER 5	WEIGHER FEEDER 6
				MDWF1	MDWF2	MDWF3	MDWF4	MDWF5	MDWF6
**PARAM	DESCRIPTION	RANGE	FACTORY	**AB 525 VFD**	**AB 525 VFD**	**AB 525 VFD**	**AB 525 VFD**	**AB 525 VFD**	**AB 525 VFD**
		MIN / MAX	SETTING	SETTING	SETTING	SETTING	SETTING	SETTING	SETTING
P030	LANGUAGE	1 / 15	1 "ENGLISH"	1 "ENGLISH"	1 "ENGLISH"	1 "ENGLISH"	1 "ENGLISH"	1 "ENGLISH"	1 "ENGLISH"
P031	MOTOR NP VOLTS	20 / RATED VOLTS	DRIVE RATED	460	460	460	460	460	460
P032	MOTOR NP HERTZ	15 / 500 HZ	60 HZ	60	60	60	60	60	60
P033	MOTOR OL CURRENT	0.0 / RATED AMPS X 2	DRIVE RATED AMPS	1.3	1.3	1.3	1.3	1.3	1.3
P034	MOTOR NP FLA	0.1 / RATED AMPS	DRIVE RATING	1.2	1.2	1.2	1.2	1.2	1.2
P035	MOTOR NP POLES	2 - 40 / 40	4	6	6	6	6	6	6
P036	MOTOR NP RPM	0 / 2400 RPM	1750 RPM	1200	1200	1200	1200	1200	1200
P037	MOTOR NP POWER	0 / DRIVE RATED POWER	DRIVE RATED POWER	0.25 Kw, (1/3 HP)	0.25 Kw, (1/3 HP)	0.25 Kw, (1/3 HP)	0.25 Kw, (1/3 HP)	0.25 Kw, (1/3 HP)	0.25 Kw, (1/3 HP)
P039	TORQUE PERF MODE	0 / 3	1 (SVC)						
P040	AUTOTUNE	0 / 2	0 (READY/IDLE)						
P041	ACCEL TIME 1	0.00 / 600.00 SEC	10.00 SEC	0.50	0.50	0.50	0.50	0.50	0.50
P042	DECEL TIME 1	0.00 / 600.00 SEC	10.00 SEC	0.50	0.50	0.50	0.50	0.50	0.50
P043	MINIMUM FREQ	0.00 / 500.00 HZ	0.00 HZ	20.00	20.00	20.00	20.00	20.00	20.00
P044	MAXIMUM FREQ	0.00 / 500.00 HZ	60.00 HZ	50.00	50.00	50.00	50.00	50.00	50.00
P045	STOP MODE	0 / 11	0 (RAMP, CF)						
P046	START SOURCE 1	1 / 5	1 (KEYPAD)	2 (DIGIN TRMBLK)	2 (DIGIN TRMBLK)	2 (DIGIN TRMBLK)	2 (DIGIN TRMBLK)	2 (DIGIN TRMBLK)	2 (DIGIN TRMBLK)
P047	SPEED REFERENCE1	1 / 16	1 (DRIVE POT)	7 (PRESET FREQ)	7 (PRESET FREQ)	7 (PRESET FREQ)	7 (PRESET FREQ)	7 (PRESET FREQ)	7 (PRESET FREQ)
P048	START SOURCE 2	1 / 5	2 (DIGIN TRMBLK)						
P049	SPEED REFERENCE2	1 / 16	5 (0-10V INPUT)						
P050	START SOURCE 3	1 / 5	5 (ETHERNET/IP)						
P051	SPEED REFERENCE3	1 / 16	15 (ETHERNET/IP)						
P053	RESET TO DEFALTS	0 / 3	0 (READY/IDLE)						
t062	DIGIN TERMBLK 2	0 / 52	48 (2-WIRE FWD)						
t063	DIGIN TERMBLK 3	0 / 52	50 (2-WIRE REV)						
t064	2-WIRE MODE	0 / 3	0 (EDGE TRIGGER)						
t065	DIGIN TERMBLK 5	0 / 52	7 (PRESET FREQUENCY)						
t066	DIGIN TERMBLK 6	0 / 52	7 (PRESET FREQUENCY)						
t067	DIGIN TERMBLK 7	0 / 52	5 (SPD + STRT 2)						
t068	DIGIN TERMBLK 8	0 / 52	9 (JOG FORWARD)						
t076	RELAY OUT1 SEL	0 / 29	0 (READY/FAULT)	2 (MOTOR RUNNING)	2 (MOTOR RUNNING)	2 (MOTOR RUNNING)	2 (MOTOR RUNNING)	2 (MOTOR RUNNING)	2 (MOTOR RUNNING)
t081	RELAY OUT2 SEL	0 / 29	2 (MOTOR RUNNING)						
t105	SAFETY OPEN EN	0 / 1	0 (FAULT ENABLE)	1 (FAULT DISABLED)	1 (FAULT DISABLED)	1 (FAULT DISABLED)	1 (FAULT DISABLED)	1 (FAULT DISABLED)	1 (FAULT DISABLED)
A410	PRESET FREQ 0	0.00/500.00	0.00	50.00	50.00	50.00	50.00	50.00	50.00
A411	PRESET FREQ 1	0.00/500.00	5.00	50.00	50.00	50.00	50.00	50.00	50.00
A412	PRESET FREQ 2	0.00/500.00	10.00	45.00	45.00	45.00	45.00	45.00	45.00
A413	PRESET FREQ 3	0.00/500.00	20.00	40.00	40.00	40.00	40.00	40.00	40.00
A431	JOG FREQUENCY	0.00 / 500.00 HZ	10.00 HZ						
A434	DC BRAKE TIME	0.0 / 99.9 SEC	0.0 SEC	0.5	0.5	0.5	0.5	0.5	0.5
A435	DC BRAKE LEVEL	0.0 / (RATED AMPS X 1.8)	(DRIVE RATED AMPS X 0.5)	0.2	0.2	0.2	0.2	0.2	0.2
A440	PWM FREQUENCY	2.0/16.0 KHz	4 KHz	2 KHz	2 KHz	2 KHz	2 KHz	2 KHz	2 KHz
A442	ACCEL TIME 2	0.00 / 600.00 SEC	10.00 SEC	0.50	0.50	0.50	0.50	0.50	0.50
A443	DECEL TIME 2	0.00 / 600.00 SEC	10.00 SEC	0.50	0.50	0.50	0.50	0.50	0.50
A484	CURRENT LIMIT 1	Drive Rated Amps x 1.1	Drive Rated Amps x 1.1	1.8	1.8	1.8	1.8	1.8	1.8
A486	SHEAR PIN 1 LEVEL	0.0 / (RATED AMPS X 2)	0.0A						
A487	SHEAR PIN 1 TIME	0.00 / 30.00 SEC	0.00 SEC						
A530	BOOST SELECT	0 / 14	DRIVE TYPE						
A531	START BOOST	0.0 / 25.0 %	2.5 %						
A532	BREAK VOLTAGE	0.0 / 100.0 %	25.0 %						
A533	BREAK FREQUENCY	0.0 / 500.0 HZ	15.0 HZ						
A534	MAXIMUM VOLTAGE	20 / 510 VAC (460V DRIVES)	DRIVE RATED	300	300	300	300	300	300
A543	START AT POWER UP	0 / 1	0 (DISABLED)						
A544	REVERSE DISABLE	0 / 1	0 (REV ENABLED)						

REV.	DESCRIPTION	BY	DATE
–	COMPLETELY REDRAWN	NS	2–5–26

REVISIONS

ASA

AUTOMATION SOLUTIONS OF AMERICA
1390 GATEWAY BLVD
BELOIT, WI

A DIVISION OF:

THE MORSE GROUP
WWW.THEMORSEGROUP.COM

PROJECT TITLE:
FRITO LAY TC–2
AUSTIN TEXAS
MAIN CONTROL PANEL – CP1

SHEET TITLE:
SET–UP PARAMETERS

DATE:	DESIGNED BY:	DRAWN BY:
2–5–26	JM	DH
JOB NUMBER: 103065	ACAD FILE NUMBER: 103065–E23	SHEET NO: 23 of 23

Plot Date: 02–05–2026

Drawing Name: 103065–E23